TECHNICAL PROCEDURE

TRAILER SUSPENSION SYSTEMS

SUBJECT: Welding Procedures

LIT NO: L64
DATE: February 2026 **REVISION:** K

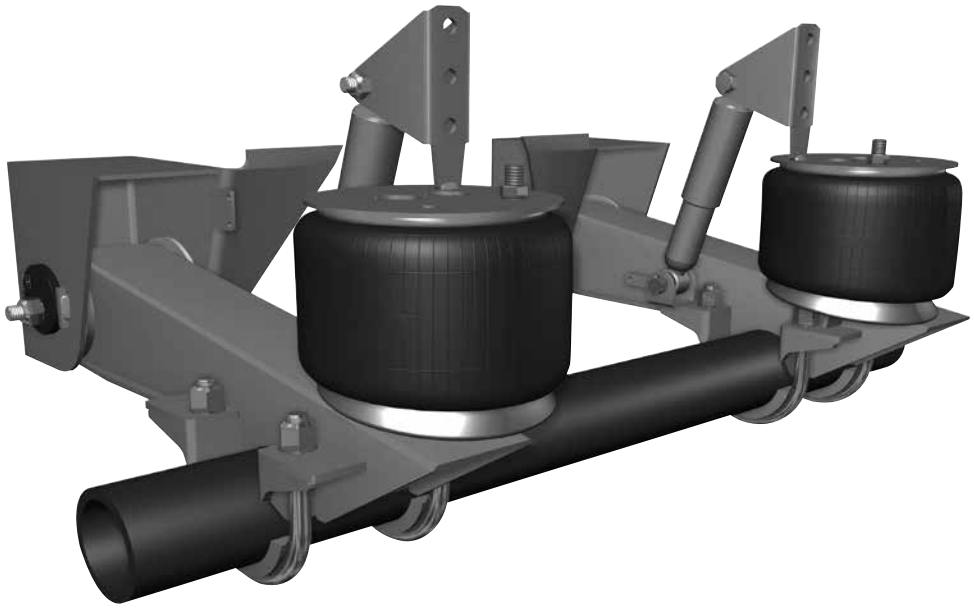

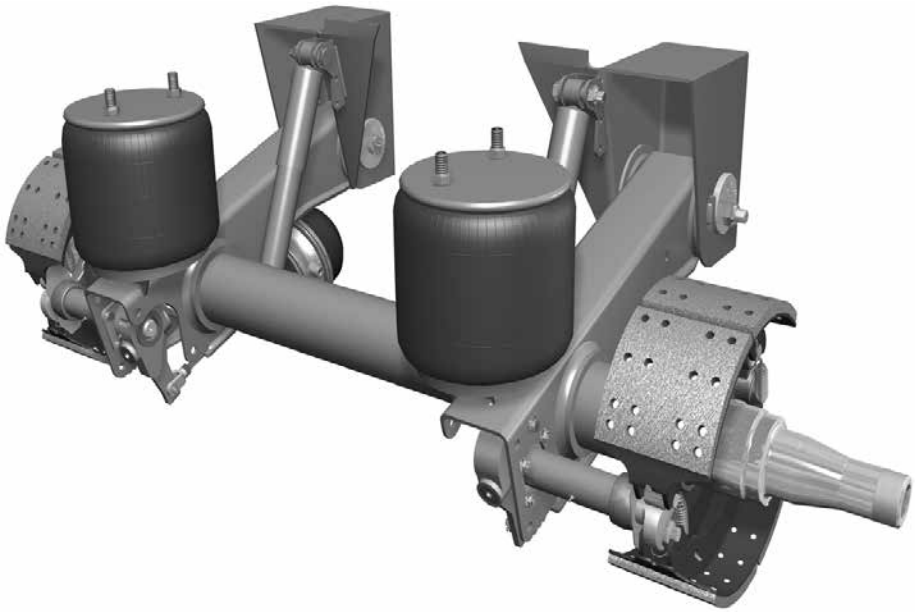

HENDRICKSON
The World Rides On Us®

TABLE OF CONTENTS

Conventions Applied In This Document 3
Explanation of Signal Words 3
Links 3
General Service Notes 3
During Service: 3
Important Safety Notices 3
Contacting Hendrickson 5
Literature 5
Recommended Welding Practices 6
Welding Parameters 6
Welding Area Preparations 6
Welding Symbols 7
Suspension Beam to Axle Weld Parameters (HT™ Series Suspensions Only) 8
Suspension Beam And Axle Setup 8
Suspension to Axle Weld Procedure 8
Axle Weld Hammer Peening 12
Wide Frame Bracket Welding Procedures 13
C-Channel Welding Procedures 16
Frame Bracket Gusset Welding Procedure 17
INTRAAX® Suspension Air Spring Mounting Plate Welding Procedures 18
HT™ Series Suspension Air Spring Mounting Plate Weld 19
HT™ Series Y-Beam Suspension Bushing Tube Welding 21
Welding Bushing Tube Sleeves 21
Welding Bushing Tube Assemblies 22
Welded Collar Pivot Connection 22
Rebound Limiter Option 22
Attaching Rear Shock Clevis 22
HT™ Series Remote Shock Clevis 23
Welding Tank Brackets To Slider Box 23
Welding to Galvanized Steel 24
Welding to Powder Coat 25
Welding to Primer 25

CONVENTIONS APPLIED IN THIS DOCUMENT

This section explains the techniques used in this document to convey important information, safety issues and how to contact Hendrickson.

EXPLANATION OF SIGNAL WORDS

Hazard signal words (such as DANGER, WARNING or CAUTION) appear in various locations throughout this publication. Information accented by one of these signal words must be observed at all times. Additional notes are utilized to emphasize areas of procedural importance and provide suggestions for ease of repair. The following definitions comply with ANSI Z535.4 and indicate the use of safety signal words as they appear throughout the publication.

⚠**DANGER: INDICATES IMMEDIATE HAZARDS WHICH WILL RESULT IN SEVERE PERSONAL INJURY OR DEATH.**

⚠**WARNING: Indicates hazards or unsafe practices which could result in severe personal injury or death.**

⚠**CAUTION: Indicates a hazardous situation which, if not avoided, could result in minor or moderate injury.**

NOTICE: Indicates hazards or unsafe practices which could result in damage to machine or equipment.

IMPORTANT: An operating procedure, practice or condition that is essential to emphasize.

⚠ Safety alert symbol used to indicate a condition exists that may result in personal injury or harm to individuals. It must be applied to DANGER, WARNING and CAUTION statements, which emphasize severity.

LINKS

Links are identified by a dark grey line under the linked text. Internal links allow the reader to jump to a heading, step or page in this document. External links open the website or document referenced.

GENERAL SERVICE NOTES

IMPORTANT: Special attention should be paid to the information included in EXPLANATION OF SIGNAL WORDS.

Before you begin:
Read, understand and comply with:

- All instructions and procedures.
- All signal word (CAUTION, WARNING and DANGER) statements to help avoid personal injury or property damage.
- Company's maintenance, service, installation and diagnostic practices.
- Vehicle manufacturer's safety instructions when working on the vehicle.
- Vehicle manufacturer's instructions for recommended practices not described in this manual.
- Local safety regulations.

DURING SERVICE:

- Work must be carried out by trained personnel.
- Sudden release of parking springs (e.g. the spring brake part of the brake chamber or the brake return spring) may cause injury.
- Use recommended tools only.
- Before releasing trailer back into service, perform operational checks and test the trailer to ensure brakes are working correctly.

Hendrickson reserves the right to make changes and improvements to its products and publications at any time. Consult the Hendrickson website (www.Hendrickson-intl.com) for the latest version of this manual.

IMPORTANT SAFETY NOTICES

Proper installation, maintenance, service and repair is important to the reliable operation of the suspension system. The procedures recommended by Hendrickson and described in this publication are methods of performing inspection, maintenance, service and repair.

The warnings and cautions should be read carefully to help prevent personal injury and to assure that proper methods are used. Improper maintenance, service or repair can cause damage to the vehicle and other property, personal injury, an unsafe operating condition and potentially void the manufacturer's warranty.

Carefully read, understand and follow all safety related information within this publication.

⚠WARNING: DO NOT modify or rework parts. Use ONLY Hendrickson-authorized replacement parts. Use of modified or non-genuine replacement parts not authorized by Hendrickson may not meet Hendrickson's specifications. It can also result in failure of the part, loss of vehicle control and possible personal injury or property damage. Do not modify parts without written authorization from Hendrickson.

⚠WARNING: Always wear proper eye protection and other required personal protective equipment (PPE) when performing vehicle maintenance, repair or service. Follow federal, state and local safety regulations as appropriate.

⚠WARNING: Solvent cleaners can be flammable, poisonous and cause burns. To help avoid serious personal injury, carefully follow the manufacturer's product literature and the following procedures:

- **Wear proper eye protection.**
- **Wear clothing that protects your skin.**
- **Work in a well-ventilated area.**
- **DO NOT use gasoline or solvents that contain gasoline. Gasoline can explode.**
- **Hot solution tanks or alkaline solutions must be used correctly. Follow the manufacturer's recommended instructions and guidelines carefully to help prevent personal accident or injury.**

⚠WARNING: The following precautions and considerations should be applied when handling brake lining:

- **Compressed air or dry brushing should never be used for cleaning brake assemblies or work areas.**
- **Follow applicable shop, local, state and federal safe practices for working with and disposal of brake lining materials.**
- **Hendrickson recommends that workers doing brake work should take steps to minimize exposure to airborne brake lining particles. Proper procedures to reduce exposure include:**
  - **Working in a well-ventilated area,**
  - **Segregation of areas where brake work is done,**
  - **Use of local filtered ventilation systems or use of enclosed cells with filtered vacuums.**
- **Material Safety Data Sheets (MSDS) on this product, as required by OSHA, are available online from Hendrickson at www.Hendrickson-intl.com/trailerlit.**

⚠CAUTION: A mechanic using a service procedure or tool has not been recommended by Hendrickson must first satisfy himself that neither his safety nor the vehicle's safety will be jeopardized by the method or tool selected. Individuals deviating in any manner from the provided instructions assume all risks of consequential personal injury or damage to equipment.

NOTICE: When welding to or on the axle, take every caution to prevent bearing damage. When grounding welding equipment to axle, prevent current from passing through the wheel bearings.

A connection that places a wheel bearing between the ground cable connection and the weld area can damage the bearing by electric arcing.

CONTACTING HENDRICKSON

Contact Hendrickson Trailer Technical Services for technical assistance as needed. To do so, several options are available. Technical Services must be contacted before performing any warranty related service.

Prior to contacting Technical Services, it is best to have the following information about the vehicle and Hendrickson suspension available (all that apply):

- Suspension ID Tag information (Refer to Hendrickson Literature Number L977 T*railer Suspension and Axle ID Guide*, page 2 for tag location and details):
  - Suspension model number
  - Suspension serial number
  - Approximate number of suspension miles
- VIN plate data. Refer to trailer OEM manual for VIN plate location.
  - Trailer Type (van, reefer, flat bed, etc.)
  - Manufacturer
  - VIN (vehicle identification number)
  - In-service date [1]
- If applicable, description of the system problem, part number and/or part description of the reported non-functioning part.
  - Date of problem
  - Where applicable: location of problem on suspension / trailer (e.g., road side, front axle, rear axle, curb side rear, etc.)
  - Symptoms-
    - » Systems, components or function affected by the problem.
    - » When does the problem occur?
    - » How often does the problem occur?
    - » Etc.
- Any troubleshooting and/or measurements have been performed.
- Digital photos of suspension and damaged areas.
- Special application approval documentation (if applicable).

PHONE

Contact Hendrickson directly in the United States at **866**-RIDEAIR (**743-3247**). From the menu, select:

- **Technical Services**/Warranty for technical information.
- Other selections include:
  - Aftermarket Sales for replacement parts information and ordering.
  - Original Equipment Sales for parts inquiries and ordering for trailer manufacturers.

EMAIL

To contact **H**endrickson **T**railer **T**echnical **S**ervices, use the following e-mail address:

HTTS@Hendrickson-intl.com

LITERATURE

If you suspect your version of this or any other Hendrickson manual is not "Up-to-Date", the most current version is free online at:

www.Hendrickson-intl.com/TrailerLit

Available Hendrickson documentation can be viewed or downloaded from this site.

All Hendrickson online documentation are PDF files that require Adobe Acrobat Reader to open. This is a free application downloadable from Adobe's home page (http://get.adobe.com/reader/).

Other relative literature may include:

NAME	DESCRIPTION
B92	*QUIK-ALIGN® Pivot-Connection Fastener Upgrade*
L427	*Bushing Replacement Procedures*
L459	*Checking Trailer Ride Height*
L577	*HT™ Series Suspension Installation Procedures*
L579	*Alignment Procedures*
L583	*Comprehensive Warranty Statement*
L1073	*Primary Suspension Information* (includes list of installation drawings)
L1074	*Slider Suspension Information* (includes list of installation drawings)
T19003	CAUTION - *Welding to Galvanized Steel*

Table 1: *Literature*

[1] If the in-service date is unknown or not available, the vehicle date of manufacture can be substituted.

RECOMMENDED WELDING PRACTICES

Unless otherwise specified, these welding practices must be applied when welding to Hendrickson Trailer suspension systems.

⚠WARNING: Failure to follow these procedures and specifications can cause damage to the axle or suspension, and result in serious injury, death or property damage.

WELDING PARAMETERS

NOTE: Welds must be performed by a welder qualified in 2G position per www.aws.org "Performance Qualification".

- Suspension components and their mating parts must be at a minimum temperature of 60ºF (15.5ºC) and must be free from moisture, dirt, scale, paint and grease.
- It is recommended that all axle to suspension trailing arm welds be hammer peened. See AXLE WELD HAMMER PEENING on page 12.
- All welds must be performed in a flat or horizontal position.
- Unless otherwise specified, welds must terminate 0.5 inch (12.7 mm) from edge of parent metal.

NOTICE: Welding to the edge of parent material risks inducing cracking of the metal.

- Achieve spray arc transfer with the following welding parameters:

NOTICE: Welding of stainless steel suspension components requires procedures not covered in this document. When welding stainless steel suspension components, refer to AWS D1.6 Structural Welding Code - Stainless Steel.

SMAW	
	AWS E-7018 (Oven Dried) • 0.125 diameter 120-140 Amps D.C. DCRP • 0.156 diameter 120-160 Amps D.C. DCRP

GMAW - **Spray Transfer**	
Standard Wire:	AWS ER-70S-6 • 0.045 diameter (i.e., L-56 or NS-115)
Optional Wire:	AWS ER-70S-3 • 0.045 diameter (i.e., L-50 or NS-101)
Voltage:	26-30 Volts DCRP
Current:	275-325 Amps
Wire Feed Speed:	380-420 IPM
Electrode Extension:	3/4 inch - 1 inch
Gas:	85% Argon 15% CO_2 at 30 to 35 CFH

NOTE: Any deviation from these welding parameters must be approved in writing by Hendrickson Trailer Suspension Systems.

WELDING AREA PREPARATIONS

Prior to welding, the following preparation is recommended:

1. **Remove** all surface coating, dirt and rust in touch-up/repair location.

   » **Refer** to Welding To Galvanized on page 24, Welding to Powder Coat on page 25, or Welding to Primer on page 25 for surface preparation guidelines.

2. Thoroughly **clean** the area. Using a clean cloth, **wipe** the surface to remove any residue from previous step.

   The repair surface area shall be clean, dry and free of all contamination, e.g. oil, grease, pre-existing coating.

WELDING SYMBOLS

Shown below in Figure 1, are the welding symbols typically found on Hendrickson suspension products.

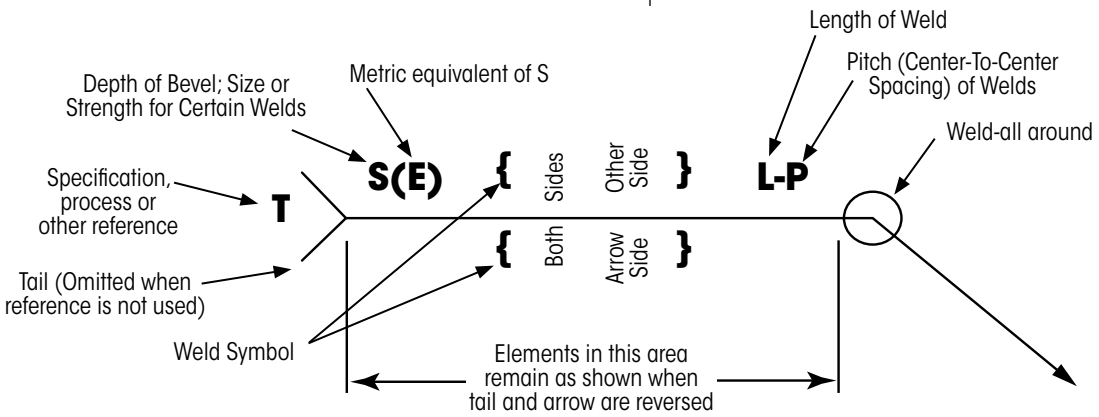

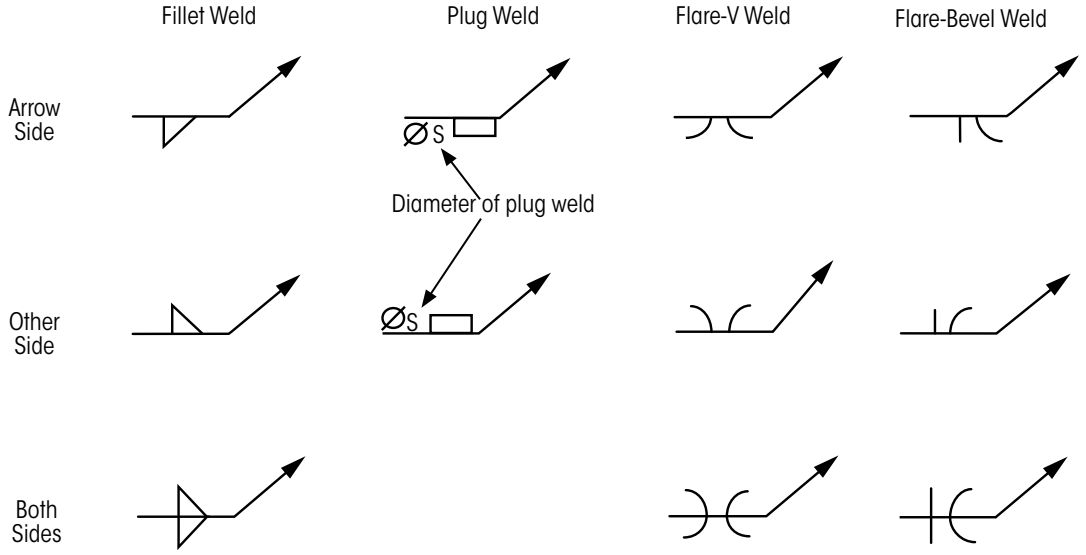

Figure 1: *Weld Symbols*

SUSPENSION BEAM TO AXLE WELD PARAMETERS (HT™ SERIES SUSPENSIONS ONLY)

All axle welds must be performed while in a horizontal or flat position.

NOTE: The following welding procedures are for horizontal (2F) positioning only.

IMPORTANT: Preheating the axle connection at the axle and suspension seat may be recommended and/or required by the axle manufacturer. Consult the axle manufacturer for their axle preheating specifications and the applicable effect on their warranty coverage.

SUSPENSION BEAM AND AXLE SETUP

1. Refer to L577 *HT™ Series Suspension Installation Procedures* to **properly locate and position** the axle in the suspension beam axle seats.

NOTE: If a Hendrickson HT axle locating fixture is used, setup details can be found in Hendrickson literature number L577 *HT Series Suspension Installation Procedures* available at www.Hendrickson-intl.com/TrailerLit. Refer to the section titled "USING HT SERIES FIXTURES"

If not using an axle locating fixture, refer to the section titled "AXLE INSTALLATION WITHOUT AN AXLE LOCATING FIXTURE".

2. Use a clamping device to **secure** the centered axle onto the positioned beams as instructed in L577.

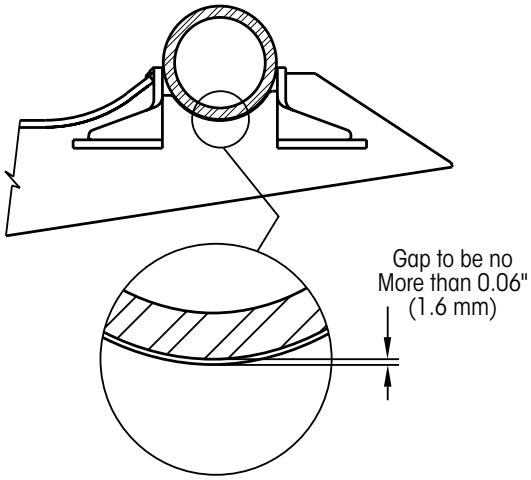

Figure 2: *Axle seat gap*

IMPORTANT: At least one side of each axle seat radius must be tight against the axle. Any resulting gap must be no more than $^{1}/_{16}$ inch (1.6 mm), Figure 2.

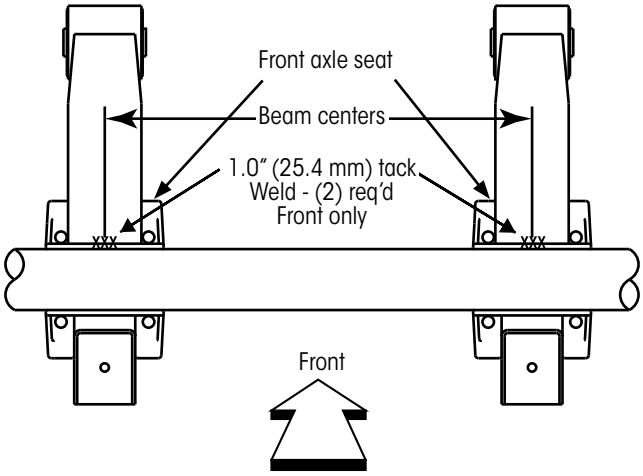

Figure 3: *Locations of tack weld*

3. Place a 1 inch (25.4 mm) long **tack weld** (Figure 3) on the front axle seat in the center of each suspension beam/axle connection, one tack weld is required per suspension beam.

SUSPENSION TO AXLE WELD PROCEDURE

Complete the **weld following the information provided** in the following headings:

A. WELD PASS SIZE, PLACEMENT, LENGTH AND POSITION:

   i. FORMED/INTEGRATED axle seats see page 9.

   ii. CAST/NON-INTEGRATED axle seats see page 10.

B. WELD DIRECTION AND SEQUENCING ON PAGE 11.

C. AXLE WELD HAMMER PEENING on page 12.

IMPORTANT: Read and understand this information prior to applying the welds. The following methods for welding the suspension beams to the axle must be applied to continue warranty for the suspension and/or axle.

WELD PASS SIZE, PLACEMENT, LENGTH AND POSITION

FORMED/INTEGRATED AXLE SEATS:
INCLUDES SUSPENSIONS HT190T, HT190U, HT230T, HT250T, HT250US, HT250YS, HT300T, AND HT300US.

NOTE: All axle seat connections require three weld passes to be performed as shown

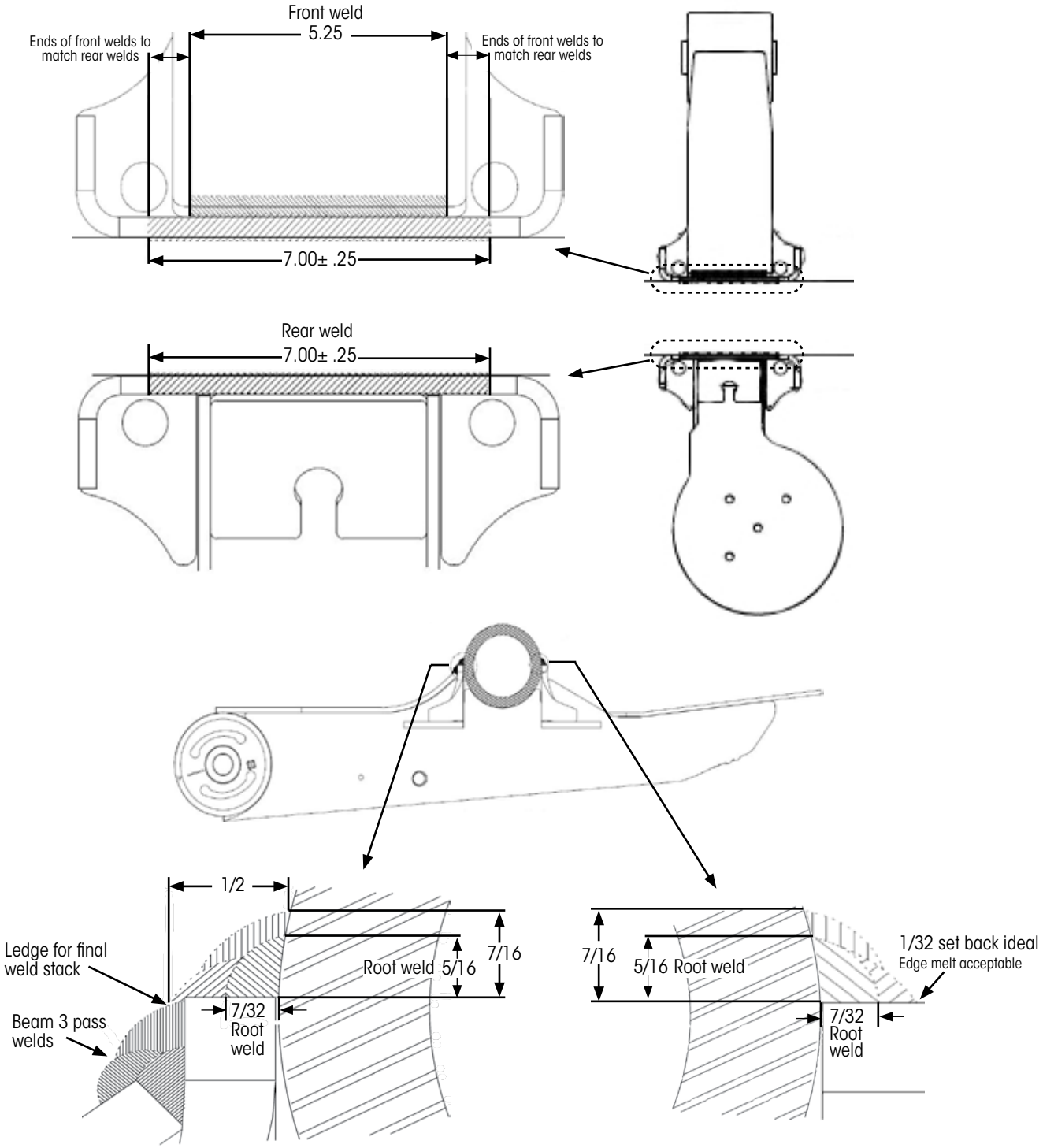

Figure 4: *Formed/Integrated axle seats weld passes*

CAST/NON-INTEGRATED AXLE SEATS
INCLUDES SUSPENSIONS HT250U, HT250Y, HT300U AND HT300YB

NOTE: All axle seat connections require three weld passes to be performed as shown

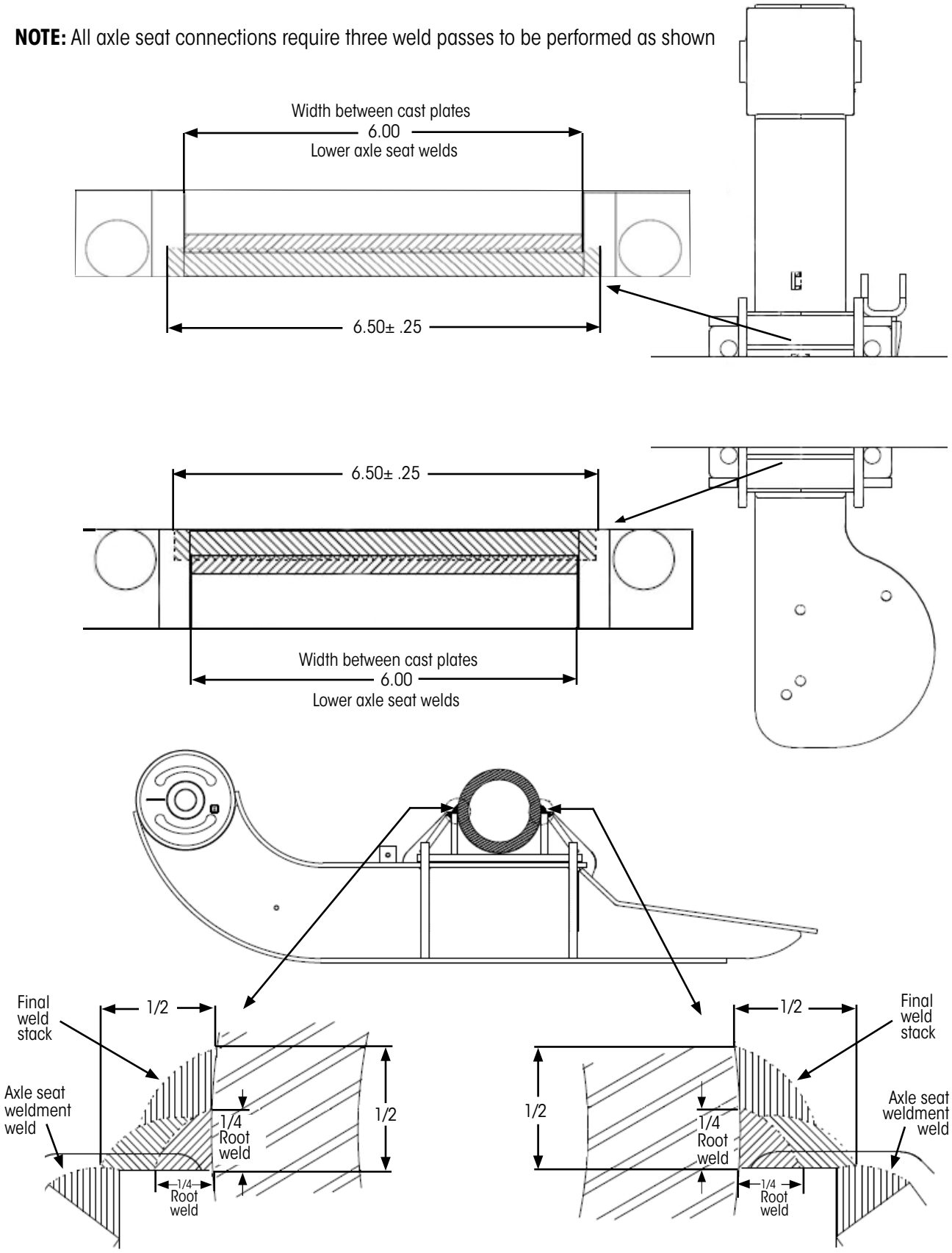

Figure 5: *Cast/Non-Integrated axle weld passes*

WELD DIRECTION AND SEQUENCING

Figure 6 explains weld symbols used in this procedure for direction and sequence.

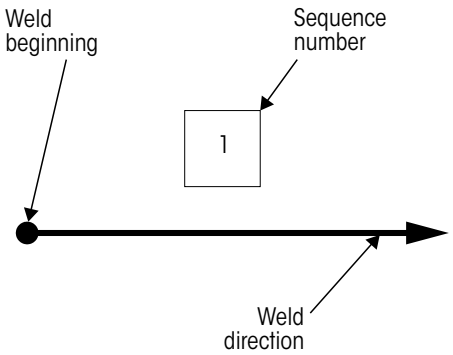

Figure 6: *Weld Instructions legend*

NOTE: The following instructions for direction and sequence must be followed when applying the weld.

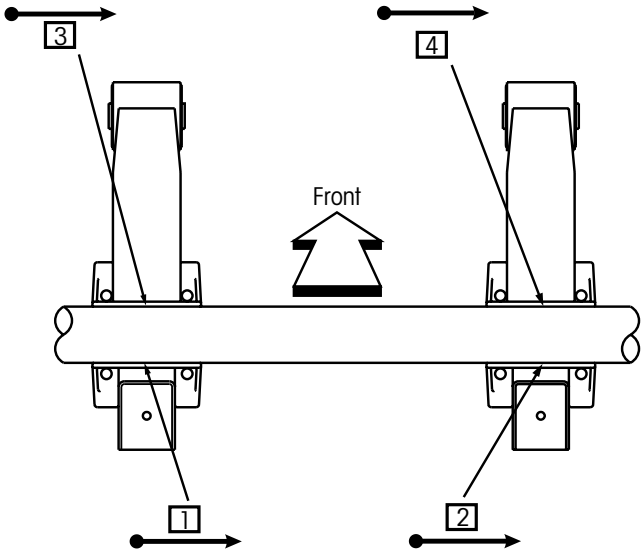

Figure 7: *Root pass sequence*

1. Beginning on the rear side of the axle/seat connection, place **four single root pass welds,** Figure 7.

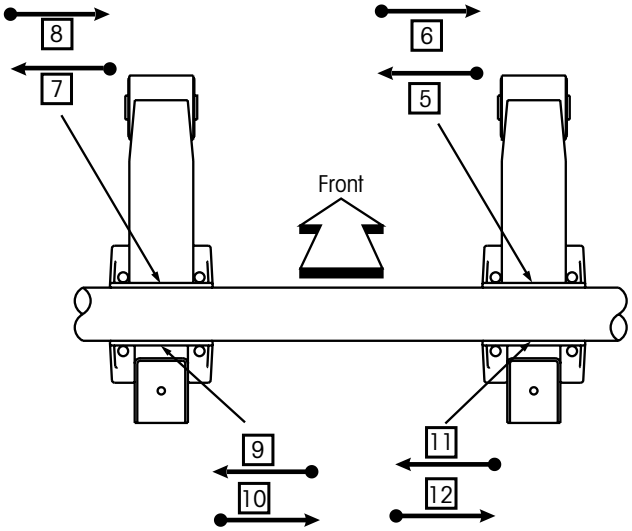

Figure 8: *Second and third pass weld sequences*

2. Continue with the second and third weld passes after all four root passes, Figure 8.

⚠CAUTION: Avoid all cold laps and undercuts. Fill all craters. Clean the weld between each pass. If these steps are not followed, failure may occur with the axle-to-suspension connection.

AXLE WELD HAMMER PEENING

Hammer peening after welding relives the thermal stresses as a result of welding.

Allow final weld to cool down to less than 400°F (204°C) before continuing.

Visually inspect the final for defects prior to peening.

Peening process shall target a peening depth of 0.03″ (0.76 mm). The target diameter of peening dimples shall be 0.10″ (2.54 mm).

It is recommended that peening shall be done using a pneumatic hammer. The radius of the peening tool shall be approximately 0.188″ (4.78 mm).

NOTICE: Use of needle scaler or needle hammer for peening shall not be acceptable.

After peening, there shall be no divots or craters and the surface shall be dimpled, resembling that of an orange peel, Figure 9.

Beam to Axle Weld, peen the toe of the weld only.

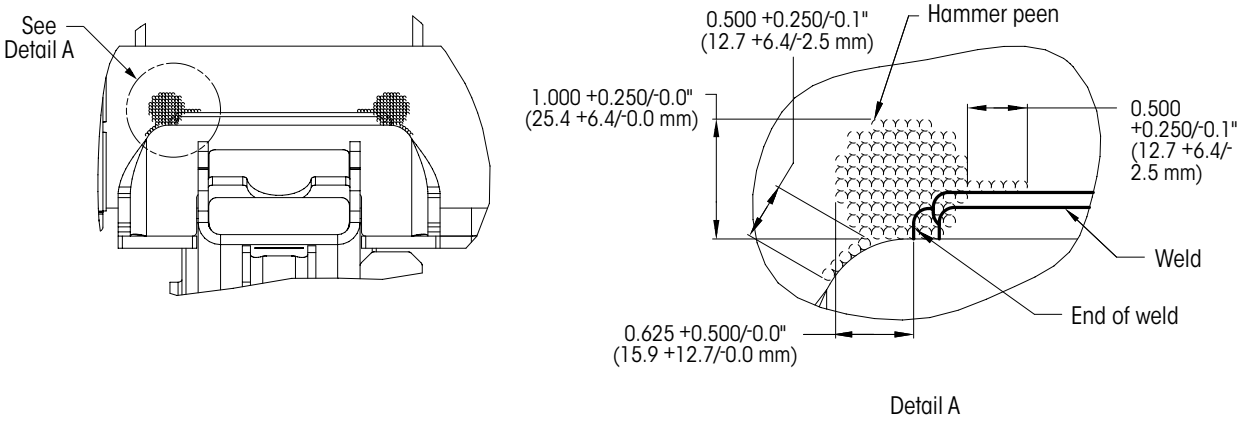

Figure 9: *Beam to axle weld peening details*

WIDE FRAME BRACKET WELDING PROCEDURES

NOTE: For narrow frame bracket details, refer to instructions listed in applicable suspension installation drawings[2].

Figure 10 through Figure 15 illustrate frame bracket welding procedures. Weld the frame brackets to the trailer frame using the parameters given in RECOMMENDED WELDING PRACTICES on page 6.

The following figures are examples of typical suspension installations. Reference specific suspension drawings for actual installation details. The procedures illustrated may need to be adapted due to varying trailer designs.

WELD-ON FRAME BRACKETS

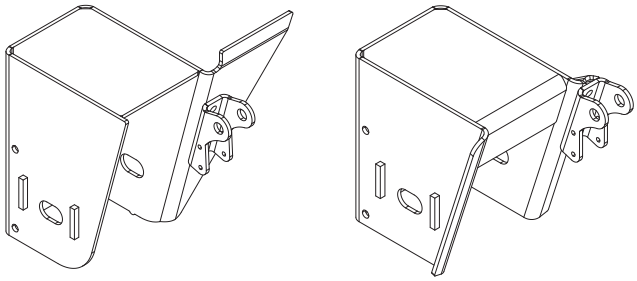

Wide Winged Wide Wingless

Figure 10: *Typical weld-on frame brackets*

NOTE: Unless otherwise noted, all welds are to be ¼ inch (6.4 mm) minimum. For more details, refer to applicable suspension installation drawings and literature.

IMPORTANT: Starting and stopping points should be **no closer than ½ inch (12.7 mm)** from the mating edge of the suspension component and the trailer frame and/or the cross members.

NOTE: It is the responsibility of the suspension installer and the vehicle designer to provide both adequate vehicle frame design and the proper securing method for the suspension system.

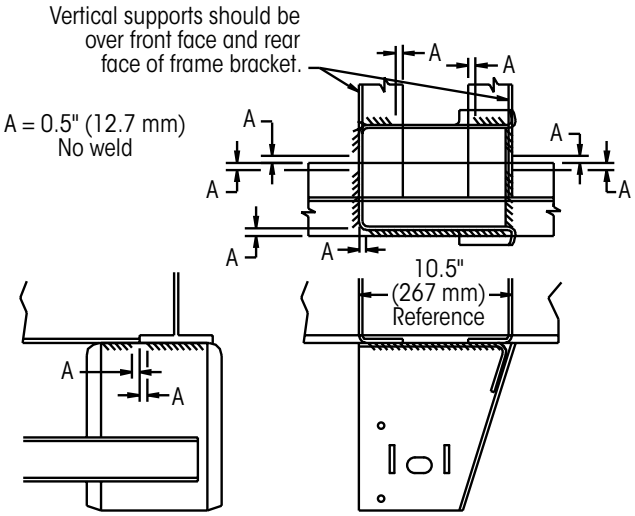

Figure 11: *Typical wingless frame bracket attachment*

[2] An installation drawing is provided with each suspension type. Generic versions are listed in Hendrickson literature number L1073 and available online at www.Hendrickson-intl.com/TrailerLit. Where duplication exists, refer to the installation drawing.

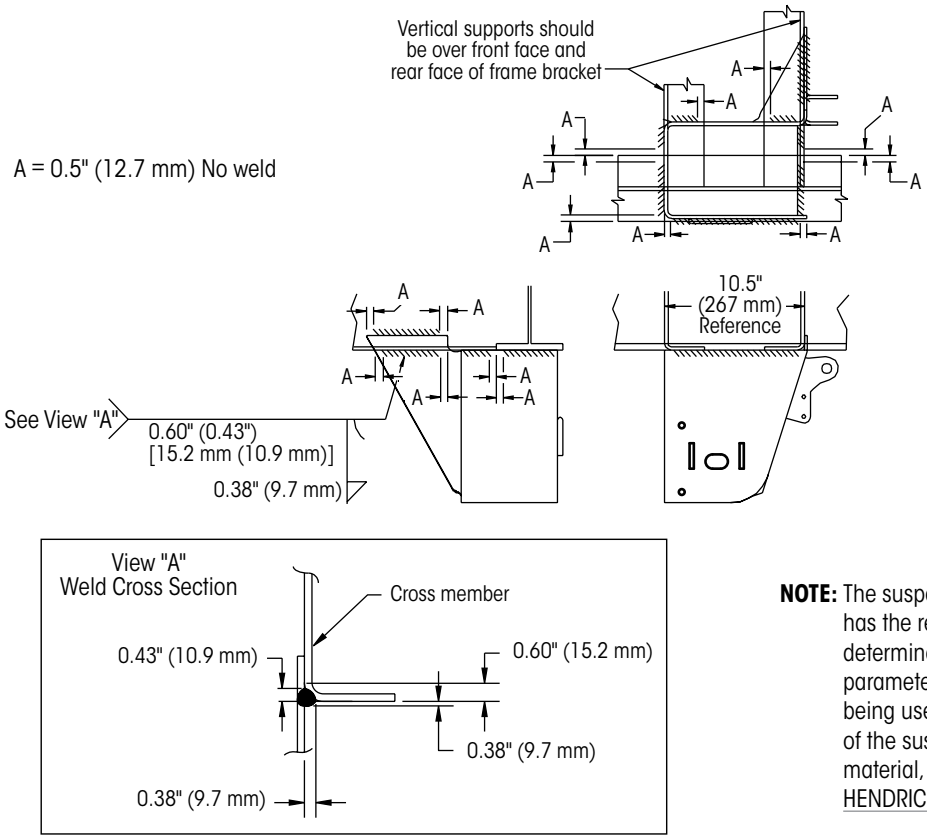

NOTE: The suspension installer has the responsibility to determine the proper welding parameters for the materials being used. For specifications of the suspension component material, refer to CONTACTING HENDRICKSON on page 5.

Figure 12: *Typical winged frame bracket attachment*

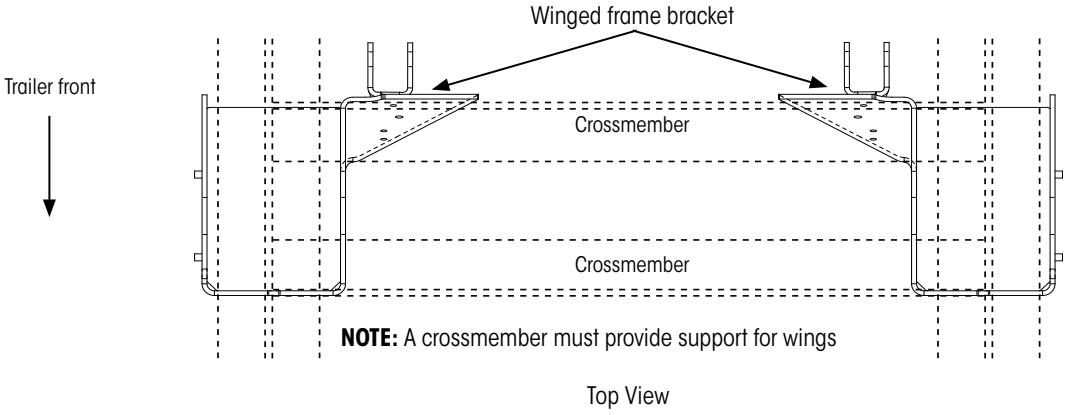

Figure 13: *Frame bracket installation for QUIK-ALIGN® models with winged frame brackets.*

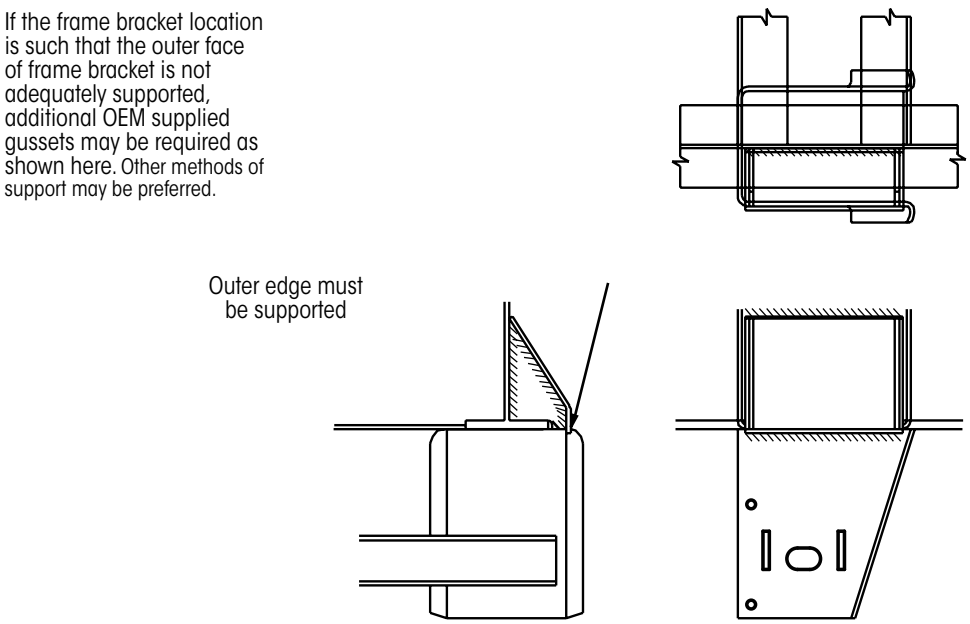

Figure 14: *Extreme offset frame bracket attachment; winged or wingless*

Additional support needs to be provided by the OEM when frame brackets extend beyond the trailer frame rail more than 1/2 inch (12.7 mm).

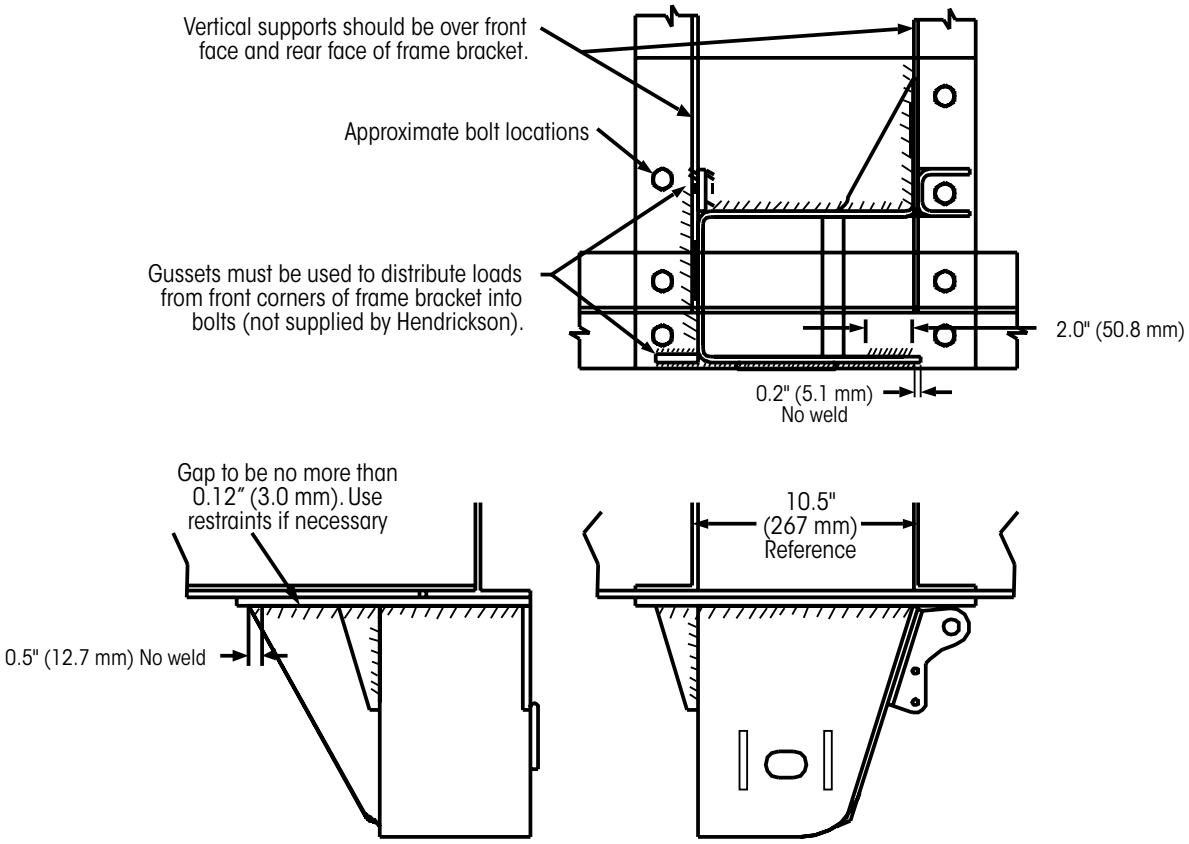

Figure 15: *Frame bracket-to-mounting plate attachment (customer supplies bolt-on plate and gussets)*

For position and other details, refer to applicable suspension installation drawings[3]

[3] An installation drawing is provided with each suspension type. Generic versions are listed in Hendrickson literature number L1073 and available online at www.Hendrickson-intl.com/TrailerLit. Where duplication exists, refer to the installation drawing.

C-CHANNEL WELDING PROCEDURES

Hendrickson has a variety of frame bracket support options and recommendations. Hendrickson Engineering should be contacted to review any application. When a C-channel is required, attach it to the frame brackets as shown in Figure 16. Refer to RECOMMENDED WELDING PRACTICES on page 6 for weld parameters.

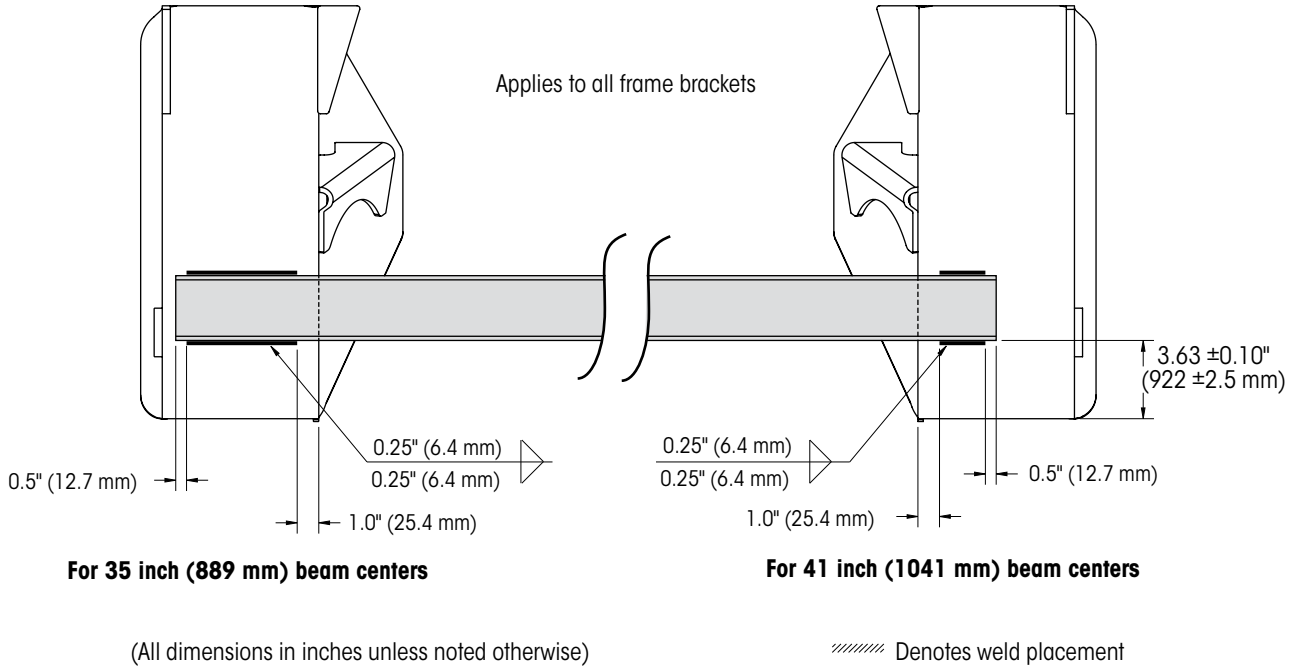

Figure 16: *Typical C-channel attachment*

For position and other details, refer to applicable suspension installation drawings[4].

[4] An installation drawing is provided with each suspension type. Generic versions are listed in Hendrickson literature number L1073 and available online at www.Hendrickson-intl.com/TrailerLit. Where duplication exists, refer to the installation drawing.

FRAME BRACKET GUSSET WELDING PROCEDURE

When frame bracket gussets are required, attach them as shown in Figure 17. Refer to RECOMMENDED WELDING PRACTICES on page 6 for weld parameters.

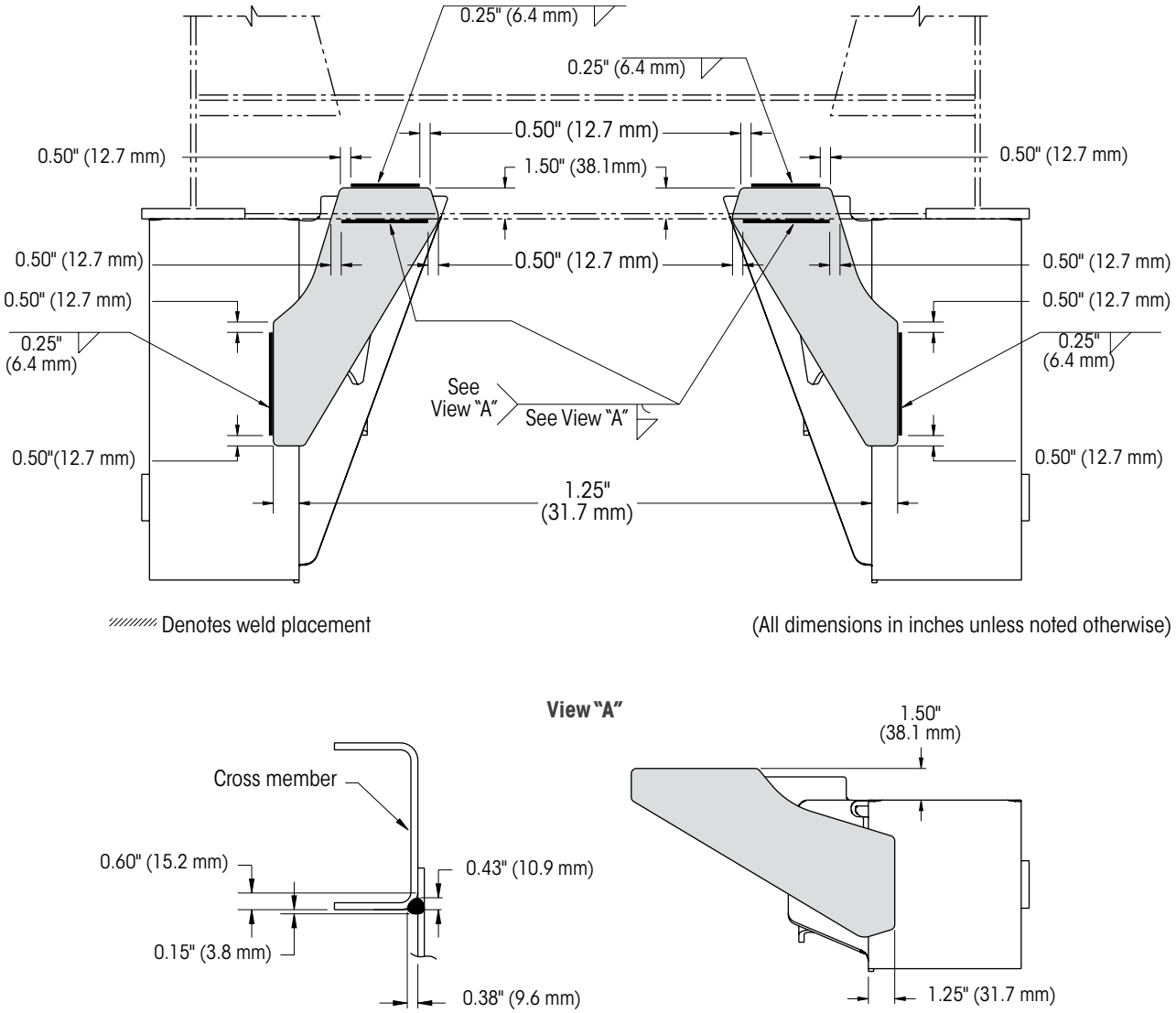

Figure 17: *Frame bracket gusset attachment*

For position and other details, refer to applicable suspension installation drawings[5].

[5] An installation drawing is provided with each suspension type. Generic versions are listed in Hendrickson literature number L1073 and available online at www.Hendrickson-intl.com/TrailerLit. Where duplication exists, refer to the installation drawing.

INTRAAX® SUSPENSION AIR SPRING MOUNTING PLATE WELDING PROCEDURES

Weld these components to the trailer frame using the parameters given in WELDING PARAMETERS on page 6.

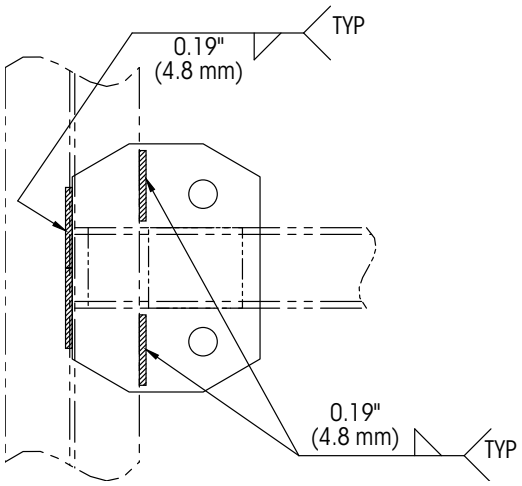

A. **Weld to trailer frame rail**

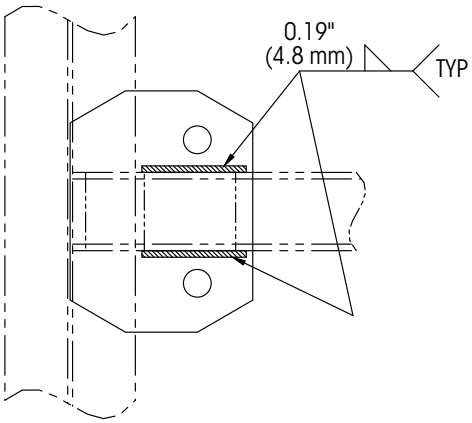

B. **Weld to crossmember**

Figure 18: *Air spring weld-on mounting plate*

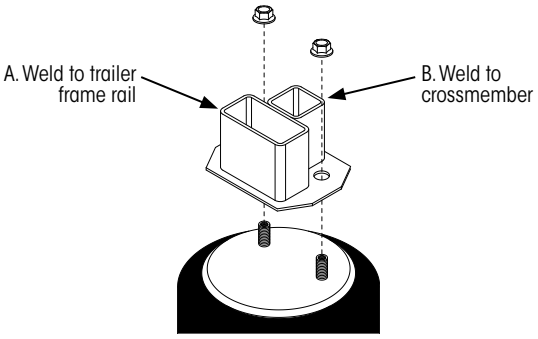

Figure 19: *Air spring weld-on mounting plate, ISO view.*

1. **Position** air spring mounting plates per specifications listed in installation drawings[6].
2. **Tack weld** mounting plates into place, Figure 18 or Figure 19.
3. **Recheck** position and **adjust** as needed.

IMPORTANT: Refer to RECOMMENDED WELDING PRACTICES on page 6 for weld parameters.

4. **Weld** mounting plate with spacer to trailer frame (Figure 18 A) or crossmember (Figure 18 B). Refer to installation drawings for more details.

NOTICE: DO NOT ATTACH air spring mounting plate or air spring to BOTH the trailer main rail and trailer crossmember. Air spring mounting is not designed to resist movement between the trailer crossmember and frame rail.

[6] An installation drawing is provided with each suspension type. Generic versions are listed in Hendrickson literature number L1073 and available online at www.Hendrickson-intl.com/TrailerLit. Where duplication exists, refer to the installation drawing.

HT™ SERIES SUSPENSION AIR SPRING MOUNTING PLATE WELD

The HT Series suspension air springs are attached similar to the INTRAAX air springs. However, when rear shocks are used on HT Series suspensions the shock clevis may be attached to the upper mounting plate. Weld these components to the trailer frame as shown in Figure 20 to Figure 25 and WELDING PARAMETERS on page 6.

NOTICE: DO NOT ATTACH air spring mounting plate or air spring to BOTH the trailer main rail and trailer crossmember. Air spring mounting is not designed to resist movement between the trailer crossmember and frame rail.

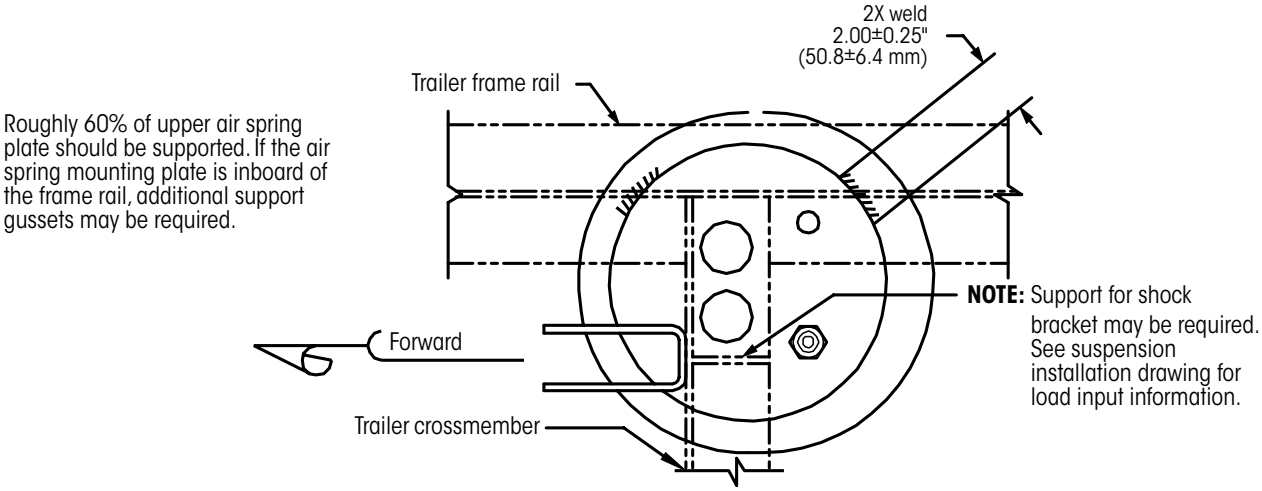

Figure 20: *Typical air spring mounting plate attachment*

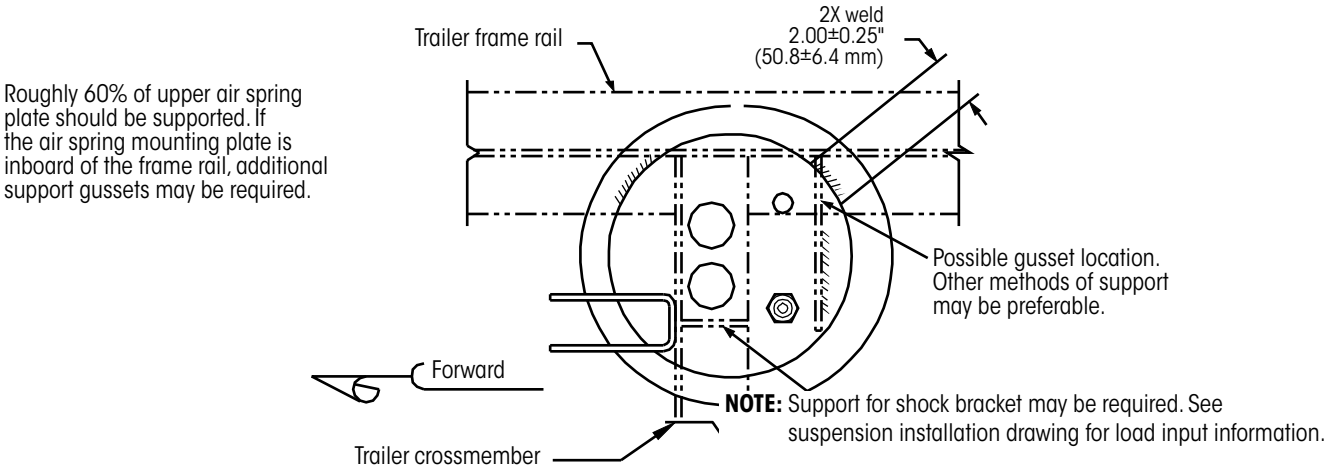

Figure 21: *Severe offset attachment*

For positioning and other details on mounting air spring plate, refer to installation drawings[7]. For HT Series suspensions, refer to Hendrickson literature number L577 *HT Series Suspension Installation Procedures* at www.Hendrickson-intl.com/TrailerLit.

[7] An installation drawing is provided with each suspension type. Generic versions are listed in Hendrickson literature number L1073 and available online at www.Hendrickson-intl.com/TrailerLit. Where duplication exists, refer to the installation drawing.

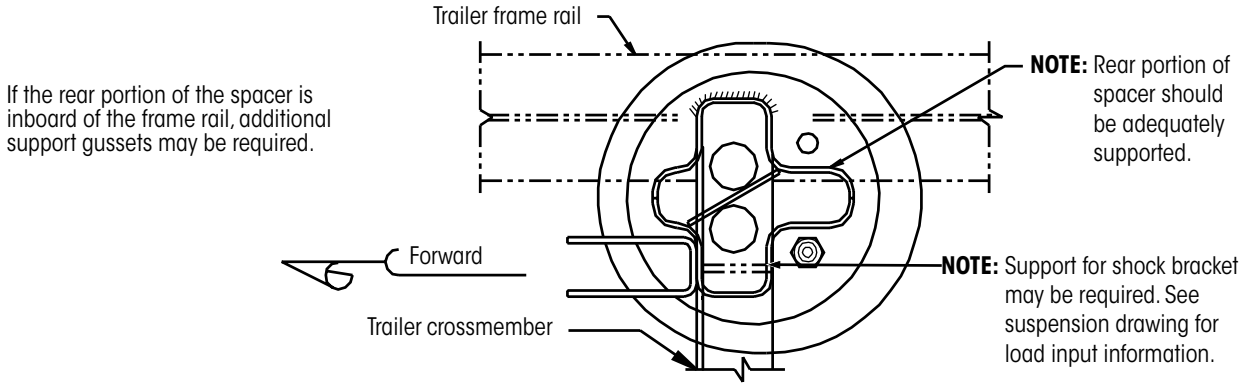

Figure 22: *Typical air spring mounting plate with spacer attachment*

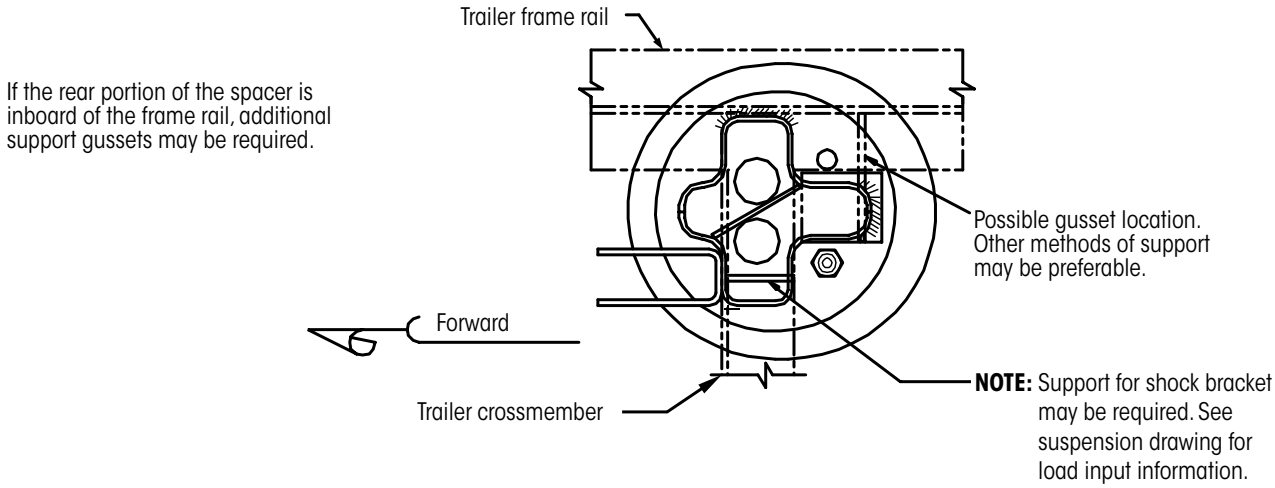

Figure 23: *Severe offset with spacer attachment*

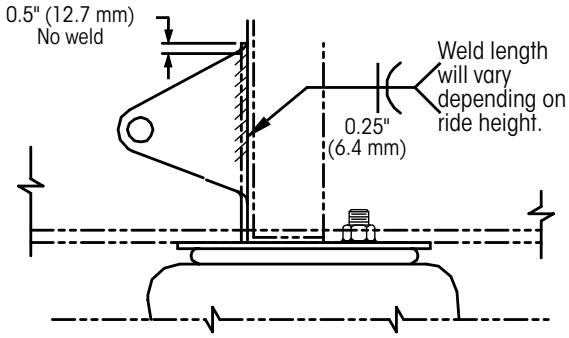

Figure 24: *Shock clevis attachment without spacer*

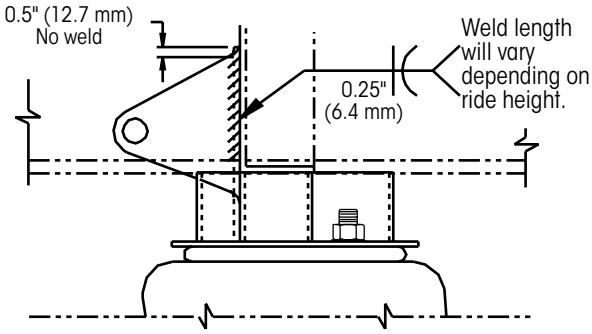

Figure 25: *Shock clevis attachment with spacer*

HT™ SERIES Y-BEAM SUSPENSION BUSHING TUBE WELDING

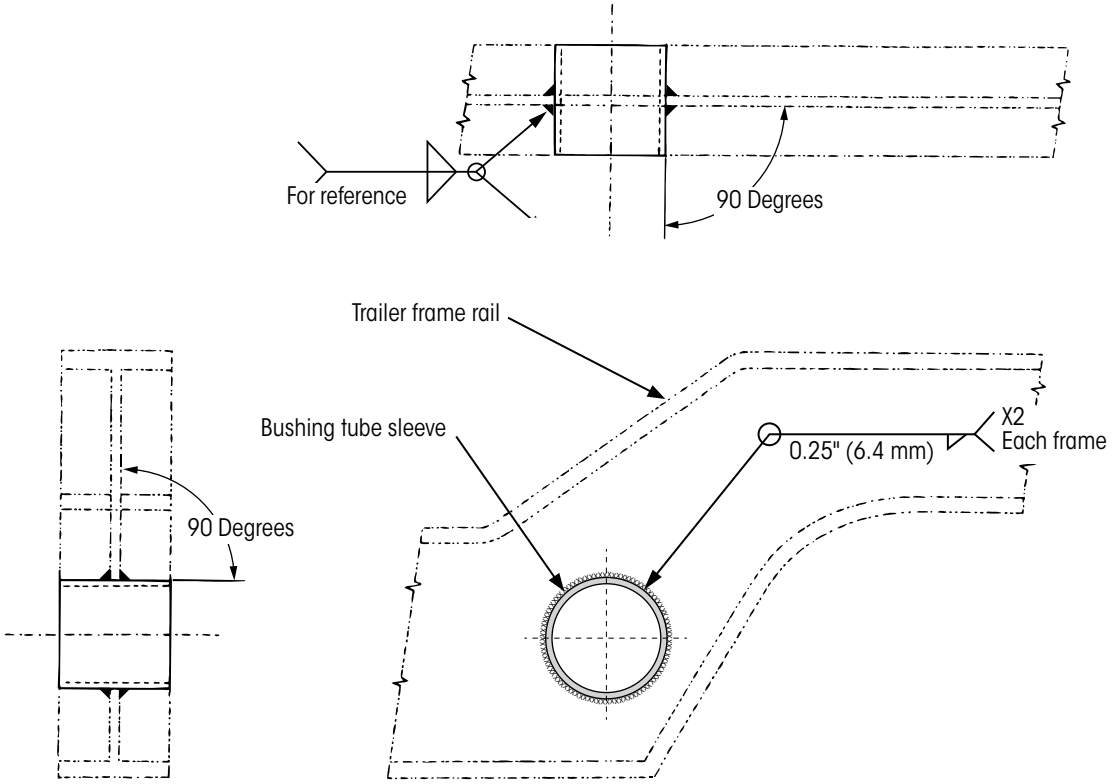

Figure 26: *Bushing tube sleeve installation*

For more details on the HT Series Y-beam suspension installation instructions refer to applicable installation drawings[8] and Hendrickson literature number L577 *HT Series Suspension Installation Procedures* at www.Hendrickson-intl.com/TrailerLit.

WELDING BUSHING TUBE SLEEVES

1. **Weld** the complete circumference of both sides of each bushing tube and sleeve to the web of the trailer frame.

   NOTICE: The bushing tube sleeve must not contain a TRI-FUNCTIONAL® Bushing at this time.

2. **Install** additional support braces (gussets) to the bushing tube sleeves, Figure 27. These braces are customer supplied and should resist all fore, aft and vertical loading of the bushing tube sleeve.

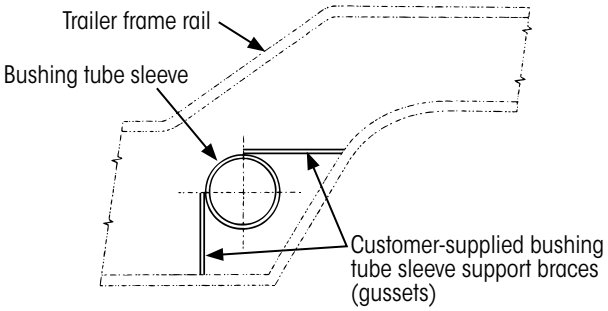

Figure 27: *Bushing tube sleeve support brace installation*

[8] An installation drawing is provided with each suspension type. Generic versions are listed in Hendrickson literature number L1073 and available online at www.Hendrickson-intl.com/TrailerLit. Where duplication exists, refer to the installation drawing.

WELDING BUSHING TUBE ASSEMBLIES

⚠**CAUTION: Allow adequate cooling between welds to prevent excessive heating of the TRI-FUNCTIONAL® Bushing.**

Weld bushing tube assemblies (Figure 28) to their respective bushing tube sleeves by using four 1/2 inch (12.7 mm) long welds equally spaced around the perimeter on both sides. Refer to L427 *Bushing Replacement Procedures* for the pivot connection assembly procedures.

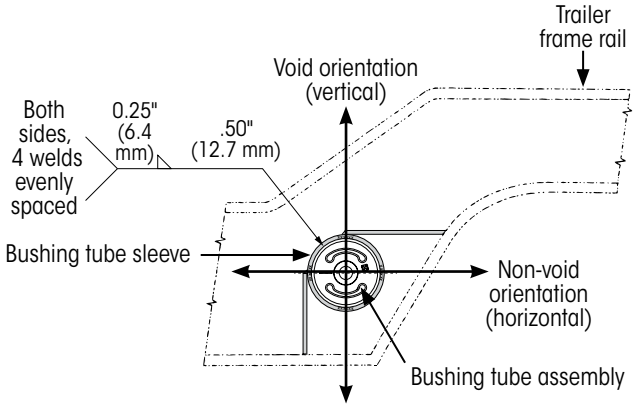

Figure 28: *Bushing tube assembly position*

WELDED COLLAR PIVOT CONNECTION

This pivot connection requires collars to be welded to the frame bracket as shown in Figure 29. Refer to L579 *Alignment Procedures* for alignment procedure details.

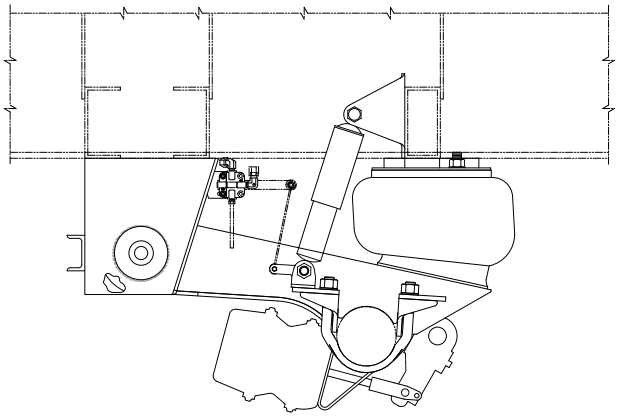

Figure 29: *HT230T suspension with welded collar*

REBOUND LIMITER OPTION

Rebound limiters (down stops) are optional for some suspension models. A chain is typically used (Figure 30) for AAL, AAEDL and AAEDT suspension types with wide frame brackets. Down stops are attached between the trailer frame and the suspension beam as shown. Refer to the applicable suspension installation drawing[9] or kit installation drawing for positioning and weld specifications.

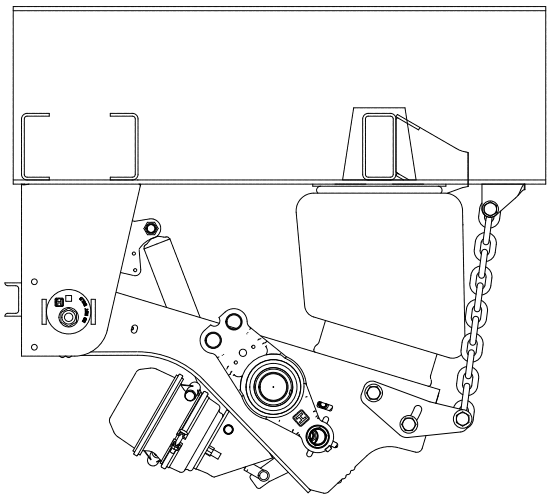

Figure 30: *AAEDT with chain down stop*

ATTACHING REAR SHOCK CLEVIS

When rear shocks (Figure 31) are used on INTRAAX or HT™ Series suspensions, the upper shock clevis may be welded to the trailer frame or crossmember, but not both; similar to Figure 24 and Figure 25 on page 20. Refer to the applicable installation drawing for positioning and weld specifications.

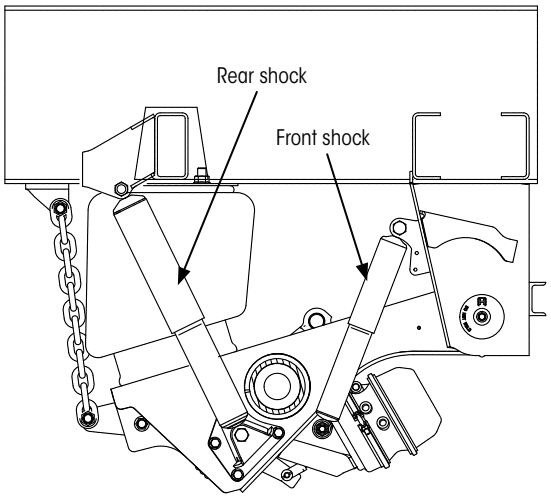

Figure 31: *AAEDT with front and rear shocks*

[9] An installation drawing is provided with each suspension type. Generic versions are listed in Hendrickson literature number L1073 and available online at www.Hendrickson-intl.com/TrailerLit.

HT™ SERIES REMOTE SHOCK CLEVIS

For some HT™ Series suspension models, the lower shock clevis is welded to the axle as shown in Figure 32. In this case the remote upper shock clevis is welded to a frame crossmember. For positioning and weld specifications, refer to the installation drawing and Hendrickson literature number L577 *HT Series Suspension Installation Procedures* at www.Hendrickson-intl.com/TrailerLit. If weld specifications are not included in the installation drawing, refer to Figure 32 or CONTACTING HENDRICKSON on page 5.

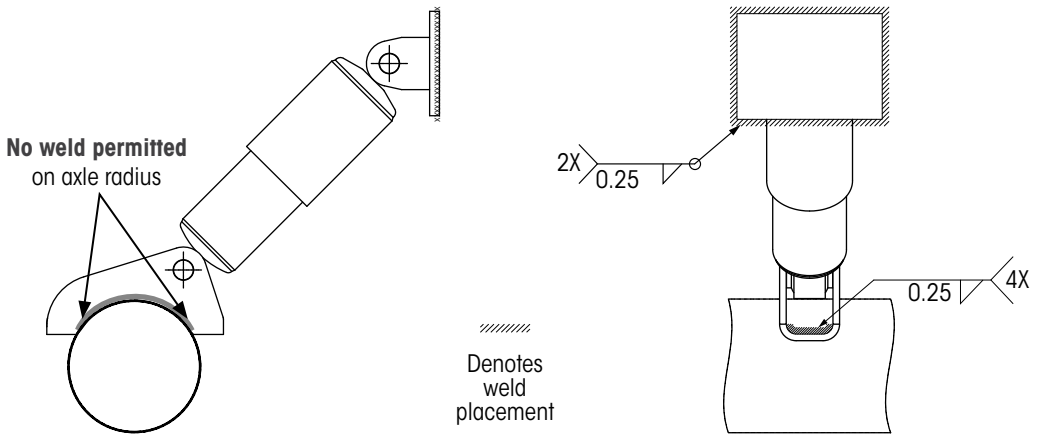

Figure 32: *Remote shock mount weld specifications*

WELDING TANK BRACKETS TO SLIDER BOX

All tank brackets welded to the slider box structure must be done so using a window weld as shown in Figure 33. This applies to either the installation of a tank bracket to the slider or the repair of the tank bracket weld to the slider. Butt or plug welding is not allowed and may cause cracks in slider box structural components.

Any welds on the slider must first be approved by Hendrickson.

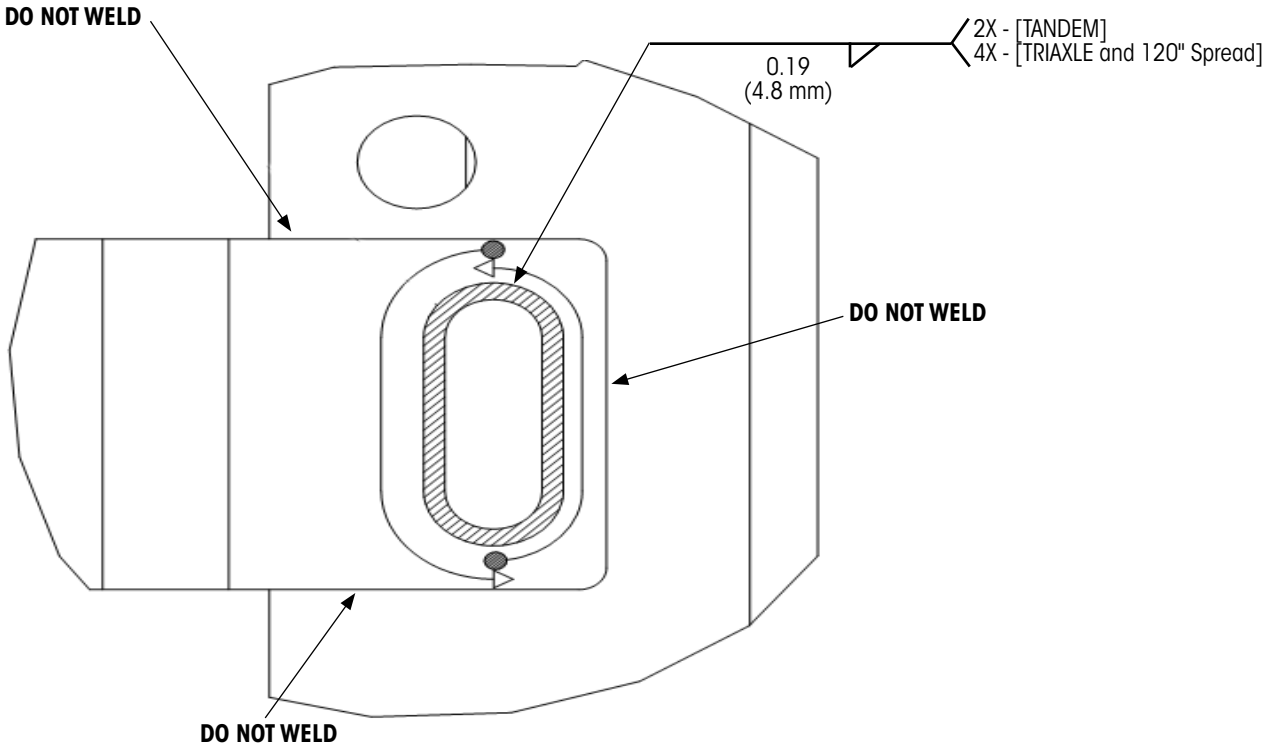

Figure 33: *Tank bracket window weld*

WELDING TO GALVANIZED STEEL

Some or all steel components on a suspension may be galvanized. Occasionally **authorized** additions or repairs may require welding to galvanized coated steel. When this occurs, additional cautions and considerations are applicable, different from welding to plain steel.

⚠**WARNING: According to OSHA - "Zinc is used in large quantities in the manufacture of brass, galvanized metals and various other alloys. Inhalation of zinc oxide fumes can occur when welding or cutting on zinc-coated metals. Exposure to these fumes is known to cause metal fume fever. Symptoms of metal fume fever are very similar to those of common influenza. They include fever (rarely exceeding 102° F), chills, nausea, dryness of the throat, cough, fatigue and general weakness and aching of the head and body. The victim may sweat profusely for a few hours, after which the body temperature begins to return to normal. The symptoms of metal fume fever have rarely, if ever, lasted beyond 24 hours."**

⚠**CAUTION: Appropriate PPE (Personal Protective Equipment) should be used while working with galvanize coatings, e.g. eye, face, hand, foot and respirator protection. Repairs on galvanized coatings should be conducted in accordance with ASTM A780M *Standard Practice for Repair of Damaged and Uncoated Areas of Hot-Dip Galvanized Coatings*.**

⚠**CAUTION: All safety precautions should be taken during all cleaning and repair stages.**

1. **Remove** all galvanized coating in touch-up/repair location.
2. Thoroughly **clean** the area:
   A. Using a clean cloth, wipe the surface to remove any residue from previous step.
   B. The repair surface area shall be clean, dry and free of all contamination, e.g. oil, grease, pre-existing coating.
3. **Weld** required components according to ASTM A780M.
4. **Paint** cleaned and/or repaired areas using zinc rich primer that meets the requirements of ASTM A780 (97% zinc in dry film).
   A. Before brushing or spray application, make sure paint is thoroughly stirred or shaken.
   B. Allow paint to cure as per paint supplier's recommended practice.
5. **Measure** dry film thickness.

NOTE: The thickness of coating should be at least equal to the galvanized layer. Zinc rich primer will give a dull, flat appearance, different than a bright and shiny galvanized layer. The performance of the paint is comparable to galvanized steel.

6. The primer needs to be top coated with a galvanizing **paint** meeting ASTM A780 specifications. This will provide protection and give similar appearance to galvanized steel.

WELDING TO POWDER COAT

Some components on a suspension may be powder coated. Occasionally authorized additions or repairs may require welding to powder-coated components. When this occurs, additional cautions and considerations are applicable, which differ from welding to plain steel.

⚠**CAUTION: Appropriate PPE (Personal Protective Equipment) should be used while working with powder coat finishes, e.g. eye, face, hand, foot and respirator protection.**

⚠**CAUTION: All safety precautions should be taken during all cleaning and repair stages.**

1. **Remove** all powder coat in touch-up/ repair location.

   A Powder coat is a premium coating that may be more difficult to remove that standard primer. Mechanical removal methods such as a wire wheel or sandblasting are recommended.

2. Thoroughly **clean** the area:

   A. Using a clean cloth to wipe the surface and remove any residue from previous step.

   B. Clean the area with a solvent and allow it to dry, or use an industrial-grade cleaner, making sure to rinse thoroughly and dry afterwards.

⚠**WARNING: NEVER use chlorinated brake cleaner or other chlorinated cleaners on metal that will be welded. Avoid the use of all aerosol spray cleaners unless specifically marked as safe for welding.**

3. **Weld** required components, refering to Welding Area Preparations on page 6 for instructions.

4. **Paint** cleaned and/or repaired areas using a high-performance coating.

   A. Ensure the area is dry and free of contaminants such as oil or grease prior to applying the new coating. Hendrickson recommends Scharpf SG-500B (soft coat) or an equivalent coating to match the durability and performance of the original premium powder coat.

WELDING TO PRIMER

Some components on a suspension may be coated with primer. Occasionally authorized additions or repairs may require welding to primer coated components. When this occurs, additional cautions and considerations are applicable, which differ from welding to plain steel.

⚠**CAUTION: Appropriate PPE (Personal Protective Equipment) should be used while working with powder coat finishes, e.g. eye, face, hand, foot and respirator protection.**

⚠**CAUTION: All safety precautions should be taken during all cleaning and repair stages.**

1. **Remove** all primer in touch-up/ repair location.

   Ų Powder coat is a premium coating that may be more difficult to remove that standard primer. Mechanical removal methods such as a wire wheel or sandblasting are recommended.

2. Thoroughly **clean** the area:

   A. Using a clean cloth to wipe the surface and remove any residue from previous step.

   B. Clean the area with a solvent and allow it to dry, or use an industrial-grade cleaner, making sure to rinse thoroughly and dry afterwards.

⚠**WARNING: NEVER use chlorinated brake cleaner or other chlorinated cleaners on metal that will be welded. Avoid the use of all aerosol spray cleaners unless specifically marked as safe for welding.**

3. **Weld** required components, refering to Welding Area Preparations on page 6 for instructions.

4. **Paint** cleaned and/or repaired areas using a high-performance coating.

5. Ensure the area is dry and free of contaminants such as oil or grease prior to applying the new primer.

*Call Hendrickson at **866.RIDEAIR (743.3247)** for additional information.*

HENDRICKSON

www.hendrickson-intl.com

TRAILER COMMERCIAL VEHICLE SYSTEMS
2070 Industrial Place SE
Canton, OH 44707-2641 USA
866.RIDEAIR (743.3247)
Fax 800.696.4416

Hendrickson Canada
2825 Argentia Road, Unit 2-4
Mississauga, ON Canada L5N 8G6
800.668.5360
905.789.1030 • Fax 905.789.1033

Hendrickson Mexicana
Circuito El Marqués Sur #29
Parque Industrial El Marqués
Pob. El Colorado, Municipio El Marqués,
Querétaro, México C.P. 76246
+52 (442) 296.3600 • Fax +52 (442) 296.3601

L64 Rev K 01-26 CN 048648 Rev I 06-25 CN 046868 Rev H 12-23 ECN 25055 Rev G 02-16 ECN 25055 Rev F 11-14 ECN 21798

Information contained in this literature was accurate at the time of publication. Product changes may have been made after the copyright date that are not reflected. © 2025 Hendrickson USA, L.L.C. All Rights Reserved Printed in United States of America