TECHNICAL PROCEDURE

COMFORT AIR™ Rear Suspension for BYD Commercial Vehicles

SUBJECT: Service Instructions
LIT NO: 17730-359
DATE: April 2024 **REVISION:** A

TABLE OF CONTENTS

Section 1 Introduction 2

Section 2 Product Description 2

Section 3 Important Safety Notice 4

Section 4 Parts Lists 8

Section 5 Preventive Maintenance

Hendrickson Recommended Preventive Maintenance Intervals . . . 12

Component Inspection 12

U-bolt Clamp Group 13

Air Fitting Inspection 13

Transverse Torque Rods 14

Shock Absorber 14

Section 6 Alignment & Adjustments

Ride Height Adjustment 16

Drive Axle Alignment Inspection 17

Axle Pinion Angle 18

Axle Lateral Alignment 18

Section 7 Component Replacement

Fasteners 19

Height Control Valve 19

Air Spring 20

Shock Absorber 21

Shock Absorber Lower Mounting Bracket 22

Cross Channel 23

Clamp Group 25

Main Support Member 27

Frame Hanger 30

Transverse Torque Rods 31

Section 8 Torque Specifications 32

Section 9 Troubleshooting Guide 34

Section 10 Plumbing Diagrams 35

HENDRICKSON
The World Rides On Us™

SECTION 1
Introduction

This publication is intended to acquaint and assist maintenance personnel in the preventive maintenance, service, repair and rebuild of the COMFORT AIR™ rear suspension system for applicable BYD Commercial Vehicles.

NOTE Use only Genuine Hendrickson parts for servicing this suspension system.

It is important to read and understand this entire Technical Procedure publication and all work instructions and safety related information provided by the vehicle manufacturer prior to performing any maintenance, service, repair, or rebuild of this product. The information in this publication contains parts lists, safety information, product specifications, features, proper maintenance, service, repair, and rebuild instructions for the COMFORT AIR rear suspension.

Hendrickson reserves the right to make changes and improvements to its products and publications at any time. Contact Hendrickson China for information on the latest version of this manual.

The latest revision of this publication is also available online at www.hendrickson.com.cn

SECTION 2
Product Description

The COMFORT AIR rear air suspension system – based on Hendrickson's technology, proven in over two million suspensions – helps increase driver comfort and provides superior cargo protection. The COMFORT AIR suspension also helps to protect the vehicle from stress. The system combines superior comfort, outstanding ride, improved handling and reduced maintenance.

- **Air springs** – Adjusts to changing load conditions to deliver superior ride quality.
- **Axle connection** – No welding required for reduced maintenance.
- **Frame hanger** – Wide footprint distributes load over a larger area for reduced frame stress.
- **Height control valve** – Maintains precise ride height control through changing road surfaces, load, and driving conditions.
- **Main support member** – Extended length generates lower spring rate for optimized roll stiffness, providing a more comfortable and compliant ride.
- **TRAAX ROD™ torque rods** – Provides greater durability over conventional torque rods and enhances handling during cornering by controlling lateral forces to maintain axle position.

FIGURE 2-1

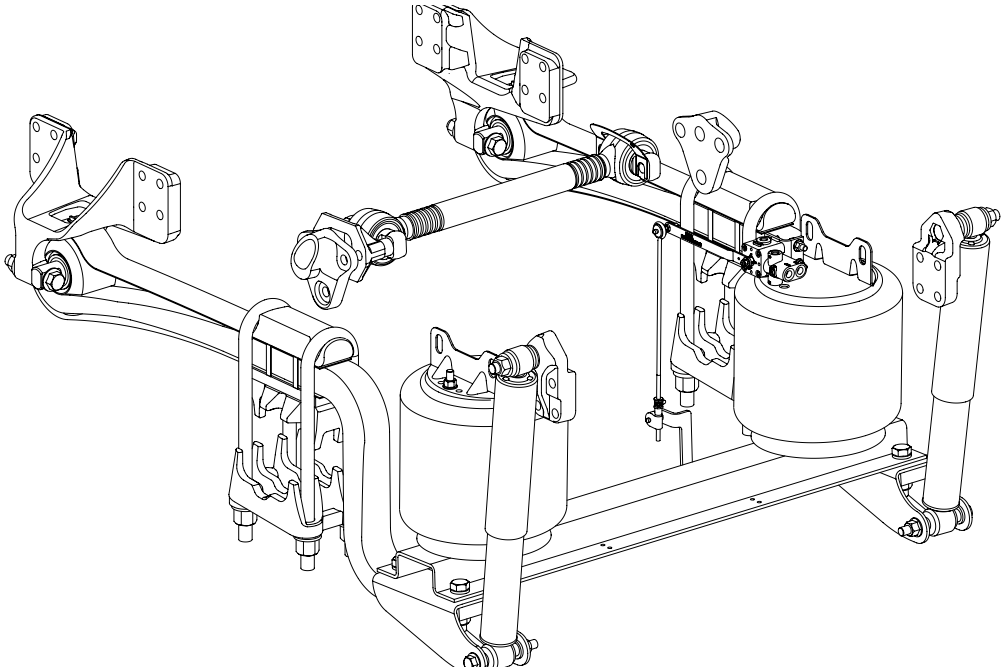

COMFORT AIR for BYD Specifications

	8.5t
Axle Configuration	Single
Ride Height	211.5 mm

All applications must comply with applicable Hendrickson specifications and must be approved by the vehicle manufacturer with the vehicle in its original, as-built configuration.

All marks are trademarks of their respective owners.

COMFORT AIR is approved for tractors, trucks and intercity delivery truck applications for up to 10 percent off-highway use.

SECTION 3
Important Safety Notice

Proper maintenance, service and repair are important to the reliable operation of the suspension. The procedures recommended by Hendrickson and described in this technical publication are methods of performing such maintenance, service and repair.

This technical publication should be read carefully to help prevent personal injury and to assure that proper methods are used. Improper maintenance, service or repair may damage the vehicle, cause personal injury, render the vehicle unsafe in operation, or void the manufacturer's warranty.

Failure to follow the safety precautions in this manual can result in personal injury and/or property damage. Carefully read and understand all safety related information within this publication, on all decals and in all such materials provided by the vehicle manufacturer before conducting any maintenance, service or repair.

EXPLANATION OF SIGNAL WORDS

Hazard "Signal Words" (Danger-Warning-Caution) appear in various locations throughout this publication. Information accented by one of these signal words must be observed to help minimize the risk of personal injury to service personnel, or possibility of improper service methods which may damage the vehicle or render it unsafe.

This is the safety alert symbol. It is used to alert you to potential personal injury hazards. Obey all safety messages that follow this symbol to avoid possible injury or death.

Additional 'Notes' or 'Service Hints' are utilized to emphasize areas of procedural importance and provide suggestions for ease of repair. The following definitions indicate the use of these signal words as they appear throughout the publication.

DANGER — INDICATES AN IMMINENTLY HAZARDOUS SITUATION, WHICH, IF NOT AVOIDED, WILL RESULT IN SERIOUS INJURY OR DEATH.

WARNING — INDICATES A POTENTIAL HAZARDOUS SITUATION WHICH, IF NOT AVOIDED, CAN RESULT IN DEATH OR SERIOUS INJURY.

CAUTION — INDICATES A POTENTIAL HAZARDOUS SITUATION WHICH, IF NOT AVOIDED, MAY RESULT IN MINOR OR MODERATE INJURY.

NOTE — An operating procedure, practice condition, etc., which is essential to emphasize.

SERVICE HINT — A helpful suggestion that will make the service being performed a little easier and/or faster.

Also note that particular service operations may require the use of special tools designed for specific purposes. These special tools can be found in the Special Tools section of this publication.

The torque symbol alerts you to tighten fasteners to a specified torque value. Refer to Torque Specifications section of this publication.

SAFETY PRECAUTIONS

WARNING

FASTENERS

DISCARD USED FASTENERS. ALWAYS USE NEW FASTENERS TO COMPLETE A REPAIR. FAILURE TO DO SO COULD RESULT IN FAILURE OF THE PART OR MATING PARTS, ADVERSE VEHICLE HANDLING, PERSONAL INJURY, OR PROPERTY DAMAGE.

LOOSE OR OVER TORQUED FASTENERS CAN CAUSE COMPONENT DAMAGE, ADVERSE VEHICLE HANDLING, PROPERTY DAMAGE, OR SEVERE PERSONAL INJURY. MAINTAIN CORRECT TORQUE VALUES AT ALL TIMES. CHECK TORQUE VALUES ON A REGULAR BASIS AS SPECIFIED, USING A TORQUE WRENCH THAT IS REGULARLY CALIBRATED. TORQUE VALUES SPECIFIED IN THIS TECHNICAL PUBLICATION ARE FOR HENDRICKSON SUPPLIED FASTENERS ONLY. IF NON-HENDRICKSON FASTENERS ARE USED, FOLLOW TORQUE SPECIFICATION LISTED IN THE VEHICLE MANUFACTURER'S SERVICE MANUAL.

WARNING

LOAD CAPACITY

ADHERE TO THE PUBLISHED CAPACITY RATINGS FOR THE SUSPENSION. ADD-ON AXLE ATTACHMENTS AND OTHER LOAD TRANSFERRING DEVICES CAN INCREASE THE SUSPENSION LOAD ABOVE ITS RATED AND APPROVED CAPACITIES, WHICH CAN RESULT IN COMPONENT DAMAGE AND ADVERSE VEHICLE HANDLING, POSSIBLY CAUSING PERSONAL INJURY OR PROPERTY DAMAGE.

WARNING

MODIFYING COMPONENTS

DO NOT MODIFY OR REWORK PARTS WITHOUT AUTHORIZATION FROM HENDRICKSON. DO NOT SUBSTITUTE REPLACEMENT COMPONENTS NOT AUTHORIZED BY HENDRICKSON. USE OF MODIFIED, REWORKED, SUBSTITUTE OR REPLACEMENT PARTS NOT AUTHORIZED BY HENDRICKSON MAY NOT MEET HENDRICKSON'S SPECIFICATIONS, AND CAN RESULT IN FAILURE OF THE PART, ADVERSE VEHICLE HANDLING, POSSIBLE PERSONAL INJURY OR PROPERTY DAMAGE, AND WILL VOID WARRANTY. USE ONLY HENDRICKSON AUTHORIZED REPLACEMENT PARTS.

WARNING

TORCH/WELDING

DO NOT USE A CUTTING TORCH TO REMOVE ANY FASTENERS. THE USE OF HEAT ON SUSPENSION COMPONENTS WILL ADVERSELY AFFECT THE STRENGTH OF THESE PARTS. A COMPONENT DAMAGED IN THIS MANNER CAN RESULT IN ADVERSE VEHICLE HANDLING AND POSSIBLE PERSONAL INJURY OR PROPERTY DAMAGE.

EXERCISE EXTREME CARE WHEN HANDLING OR PERFORMING MAINTENANCE IN THE AREA OF THE MAIN SUPPORT MEMBER. DO NOT CONNECT ARC WELDING GROUND LINE TO THE MAIN SUPPORT MEMBER. DO NOT STRIKE AN ARC WITH THE ELECTRODE ON THE MAIN SUPPORT MEMBER AND AXLE. DO NOT USE HEAT NEAR THE MAIN SUPPORT MEMBER ASSEMBLY. DO NOT NICK OR GOUGE THE MAIN SUPPORT MEMBER. SUCH IMPROPER ACTIONS CAN DAMAGE THE MAIN SUPPORT MEMBER ASSEMBLY, AND CAN CAUSE ADVERSE VEHICLE HANDLING AND POSSIBLE PERSONAL INJURY OR PROPERTY DAMAGE.

WARNING

PERSONAL PROTECTIVE EQUIPMENT

ALWAYS WEAR PROPER EYE PROTECTION AND OTHER REQUIRED PERSONAL PROTECTIVE EQUIPMENT TO HELP PREVENT PERSONAL INJURY WHEN PERFORMING VEHICLE MAINTENANCE, REPAIR OR SERVICE.

CAUTION

PROCEDURES AND TOOLS

A TECHNICIAN USING A SERVICE PROCEDURE OR TOOL WHICH HAS NOT BEEN RECOMMENDED BY HENDRICKSON MUST FIRST SATISFY HIMSELF THAT NEITHER HIS SAFETY NOR THE VEHICLE'S SAFETY WILL BE JEOPARDIZED BY THE METHOD OR TOOL SELECTED. INDIVIDUALS DEVIATING IN ANY MANNER FROM THE INSTRUCTIONS PROVIDED WILL ASSUME ALL RISKS OF CONSEQUENTIAL PERSONAL INJURY OR DAMAGE TO EQUIPMENT INVOLVED.

WARNING

SUPPORT THE VEHICLE PRIOR TO SERVICING

PLACE THE VEHICLE ON A LEVEL FLOOR AND CHOCK THE WHEELS TO PREVENT THE VEHICLE FROM MOVING OR ROLLING. DO NOT WORK AROUND OR UNDER A RAISED VEHICLE SUPPORTED BY ONLY A FLOOR JACK OR OTHER LIFTING DEVICE. ALWAYS SUPPORT A RAISED VEHICLE WITH RIGID SAFETY STANDS. FAILURE TO DO SO CAN CAUSE SERIOUS PERSONAL INJURY OR DAMAGE TO EQUIPMENT.

WARNING

AIR SPRING INFLATION AND DEFLATION

PRIOR TO DISASSEMBLY OF THE SUSPENSION, AIR SPRING ASSEMBLIES MUST BE DEFLATED. UNRESTRICTED AIR SPRING ASSEMBLIES CAN VIOLENTLY SHIFT. DO NOT INFLATE AIR SPRING ASSEMBLIES WHEN THEY ARE UNRESTRICTED. AIR SPRING ASSEMBLIES MUST BE RESTRICTED BY SUSPENSION OR OTHER ADEQUATE STRUCTURE. DO NOT INFLATE BEYOND PRESSURES RECOMMENDED BY AIR SPRING MANUFACTURER, CONTACT HENDRICKSON TECHNICAL SERVICES FOR DETAILS. IMPROPER USE OR OVER INFLATION MAY CAUSE AIR SPRING ASSEMBLIES TO BURST, CAUSING PROPERTY DAMAGE AND/OR SEVERE PERSONAL INJURY.

DEFLATION: AIR SPRINGS MUST BE DEFLATED PRIOR TO LOOSENING ANY CLAMP GROUP HARDWARE. UNCONSTRAINED AIR SPRINGS WILL VIOLENTLY SHIFT WHICH CAN CAUSE PROPERTY DAMAGE OR SEVERE PERSONAL INJURY.

WARNING

PRIOR TO AND DURING DEFLATION AND INFLATION OF THE AIR SUSPENSION SYSTEM, ENSURE ALL PERSONNEL AND EQUIPMENT ARE CLEAR FROM UNDER THE VEHICLE AND AROUND THE SERVICE AREA, FAILURE TO DO SO CAN CAUSE SERIOUS PERSONAL INJURY, DEATH, OR PROPERTY DAMAGE.

CAUTION

AIR SPRING INFLATION

INFLATE THE SUSPENSION SLOWLY AND MAKE SURE THE RUBBER BLADDER OF THE AIR SPRING INFLATES UNIFORMLY AND IS NOT BINDING. FAILURE TO DO SO CAN CAUSE DAMAGE TO THE AIR SPRING AND/OR MOUNTING BRACKETS AND VOID WARRANTY.

CAUTION

AIR SPRING LOWER MOUNTING STUDS

IF THE AIR SPRING IS BEING REMOVED FOR AN ALTERNATE REPAIR, IT IS MANDATORY TO LUBRICATE THE LOWER AIR SPRING FASTENERS WITH PENETRATING OIL AND REMOVE WITH HAND TOOLS TO PREVENT DAMAGE TO THE LOWER AIR SPRING MOUNTING STUD. FAILURE TO DO SO CAN CAUSE COMPONENT DAMAGE AND VOID WARRANTY.

WARNING

TORQUE RODS

THIS HENDRICKSON SUSPENSION REQUIRES TORQUE RODS FOR SUSPENSION PERFORMANCE AND VEHICLE STABILITY. IF THESE TORQUE RODS ARE DISCONNECTED OR ARE NON-FUNCTIONAL, DO NOT OPERATE THE VEHICLE. OPERATING A VEHICLE WITH DISCONNECTED OR NON-FUNCTIONAL TORQUE RODS CAN RESULT IN ADVERSE VEHICLE HANDLING, COMPONENT DAMAGE, SUSPENSION/VEHICLE DAMAGE, AND/OR SEVERE PERSONAL INJURY.

WARNING

U-BOLT FASTENERS

U-BOLTS THAT ARE FOUND TO BE LOOSE REQUIRE THAT MATING COMPONENTS BE INSPECTED FOR SIGNS OF WEAR. ANY WORN COMPONENTS MUST BE REPLACED. FAILURE TO DO SO CAN CAUSE PREMATURE CLAMP GROUP FAILURE, COMPONENT DAMAGE, ADVERSE VEHICLE HANDLING, PROPERTY DAMAGE, OR SEVERE PERSONAL INJURY. MAINTAIN CORRECT TORQUE VALUES AT ALL TIMES. CHECK TORQUE VALUES ON A REGULAR BASIS AS SPECIFIED.

WARNING

MAIN SUPPORT MEMBER

FAILURE OF THE MAIN SUPPORT MEMBER BETWEEN THE U-BOLTS WILL REQUIRE THE REPLACEMENT OF THE MAIN SUPPORT MEMBER AND ALL CLAMP GROUP COMPONENTS. FAILURE TO DO SO CAN RESULT IN CLAMP GROUP FAILURE AND FURTHER FAILURE TO THE MAIN SUPPORT MEMBER, WHICH CAN CAUSE ADVERSE VEHICLE HANDLING, PROPERTY DAMAGE OR SEVERE PERSONAL INJURY.

WARNING

CROSS CHANNEL

IMPROPER JACKING METHODS CAN CAUSE STRUCTURAL DAMAGE WHICH CAN CAUSE ADVERSE VEHICLE HANDLING, PROPERTY DAMAGE OR SEVERE PERSONAL INJURY AND WILL VOID HENDRICKSON'S WARRANTY.

- DO NOT USE THE SUSPENSION CROSS CHANNEL AS A JACKING POINT
- REFER TO VEHICLE MANUFACTURER FOR PROPER JACKING INSTRUCTIONS

WARNING

PARTS CLEANING

SOLVENT CLEANERS CAN BE FLAMMABLE, POISONOUS, AND CAUSE BURNS. TO HELP AVOID SERIOUS PERSONAL INJURY, CAREFULLY FOLLOW THE MANUFACTURER'S PRODUCT INSTRUCTIONS AND GUIDELINES AND THE FOLLOWING PROCEDURES:

1. WEAR PROPER EYE PROTECTION.
2. WEAR CLOTHING THAT PROTECTS YOUR SKIN.
3. WORK IN A WELL-VENTILATED AREA.
4. DO NOT USE GASOLINE OR SOLVENTS THAT CONTAIN GASOLINE. GASOLINE CAN EXPLODE.
5. ACIDIC SOLUTIONS CANNOT BE USED ON ALUMINUM COMPONENTS.
6. HOT SOLUTION TANKS OR ALKALINE SOLUTIONS MUST BE USED CORRECTLY. FOLLOW THE MANUFACTURER'S RECOMMENDED INSTRUCTIONS AND GUIDELINES CAREFULLY TO HELP PREVENT PERSONAL ACCIDENT OR INJURY.

DO NOT USE HOT SOLUTION TANKS OR WATER AND ALKALINE SOLUTIONS TO CLEAN GROUND OR POLISHED PARTS. DOING SO WILL CAUSE DAMAGE TO THE PARTS AND VOID WARRANTY.

WARNING

SHOCK ABSORBERS

THE SHOCK ABSORBERS ARE THE REBOUND TRAVEL STOPS FOR THE SUSPENSION. ANYTIME THE AXLE ON A COMFORT AIR SUSPENSION IS SUSPENDED IT IS MANDATORY THAT THE SHOCK ABSORBERS REMAIN CONNECTED. FAILURE TO DO SO CAN CAUSE THE AIR SPRINGS TO SEPARATE FROM THE PISTON AND RESULT IN PREMATURE AIR SPRING FAILURE. REPLACEMENT OF SHOCK ABSORBERS WITH NON-HENDRICKSON PARTS CAN ALTER THE REBOUND TRAVEL OF THE SUSPENSION.

SECTION 4
Parts Lists

8.5t Capacity

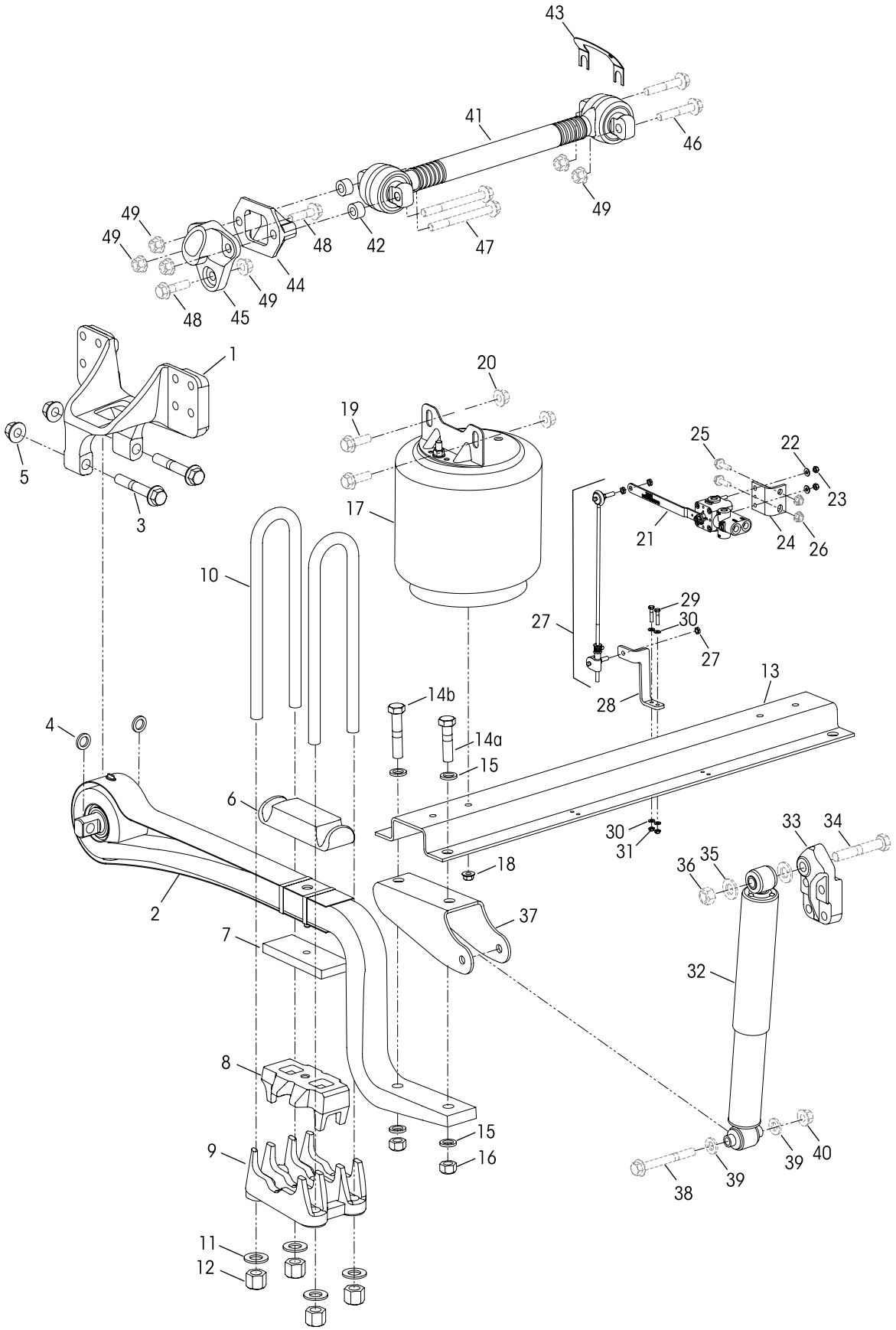

KEY NO.	PART NO.	DESCRIPTION	VEHICLE QUANTITY
1	078101-205	Frame Hanger	2
	091084-027	**Main Support Member Service Kit, One Side,** 1-leaf. Include key Nos.2, 3-5, 10-12	
2	082507-000	Main Support Member Assembly	2
	091084-024	**Frame Hanger to MSM Fastener Service Kit, One Hanger,** Includes Key Nos. 3-5	
3		*M20 X 1.5-6g Flange Bolt	4
4		*M20 Flat Washer	4
5		*M20 X 1.5-6H Flange Nut	4
6	091009-000	Top Pad	2
7	080894-001	Spring Seat Spacer	2
8	091011-150	Spring Seat – 5°	2
9	091838-050	Bottom Cap – 5°	2
	091084-023	**U-bolt Service Kit, One Side,** Includes Key Nos. 10-12	
10		*M24 X 2-6g X 425 mm U-bolt	4
11		*M24 Hardened Flat Washer	8
12		*M24 X 2-6H Hex Nut	8
13	078327-208	Cross Channel	1
	091084-025	**Cross Channel Fastener Services Kit,** Includes Key Nos. 14-16	
14		*M20 X 2.5-6g Bolt	4
a		80 mm	
b		100 mm	
15		*M20 Flat Washer	8
16		*M20 X 2.5-6H Hex Nut	4
17	079288-101	Air Spring Assembly, Includes Upper Bracket and Key No. 18	2
18		*M12 X 1.75-6H Flange Locknut	2
19		**M16 X 2-6g X 50 Flange Bolt	4
20		**M16 X 2-6H Flange Nut	4
	079290-007	Height Control Valve Assembly, Includes Key Nos. 21-24	

KEY NO.	PART NO.	DESCRIPTION	VEHICLE QUANTITY
21		*Height Control Valve	1
22		*¼" Flat Washer	2
23		*¼"-20 UNC-2B Hex Nut	2
24	079291-005	Height Control Valve Mounting Bracket	1
25		**M10 X 1.5-6g X 30 Flange Screw	2
26		**M10 X 1.5-6H Flange Nut	2
27	058994-072	Height Control Valve Linkage Rod Assembly, 370 mm	1
	091084-026	**Height Control Valve Lower Bracket Service Kit,** Includes Key Nos. 28-31	
28		*Height Control Valve Linkage Rod Lower Bracket	1
29		*M6 X 1.0-6g X 30 Hex Cap Screw	2
30		*M6 Metric Flat Washer	4
31		*M6 X 1.0-6H Nut	2
32	091336-015	Shock Absorber	2
33	080993-001	Upper Shock Bracket	2
34		**M20 X 2.5-6g X 120 mm Upper Shock Bolt	2
35		**M20 Flat Washer	4
36		**M20 X 2.5-6H Lock Nut	2
37	078325-400	Lower Shock Bracket	2
38		**M16 X 2.006g X 140 Lower Shock Flange Bolt	2
39		**M16 Metric Flat Washer	4
40		**M16 X 2.0-6H Flange Nut	2
41	091906-585	Torque Rod, 585 mm	1
42	080460-070	Torque Rod Spacer	2
43	049689-000	Torque Rod Shim	1
44	022186-000	Torque Rod Bracket	1
45	080777-000	Axle Stop	2
46		**M16 X 2.0-6g X 90 mm Flange Bolt	2
47		**M16 X 2.0-6g X 160 mm Flange Bolt	2
48		**M16 X 2.0-6g X 60 mm Flange Bolt	2
49		**M16 X 2.0-6H Flange Nut	6

NOTES: Quantities specified are shown for a vehicle. Quantities of service kit components may vary from the amount shown in lists.

* Item included in assembly or service kit only, part not sold separately.

** Not supplied by Hendrickson, although a required item. Refer to the vehicle manufacturer for more information. Hendrickson is not responsible for components supplied by the vehicle manufacturer.

COMFORT AIR Service Kits

Service Kit No. 091084-027 | Main Support Member, One Side

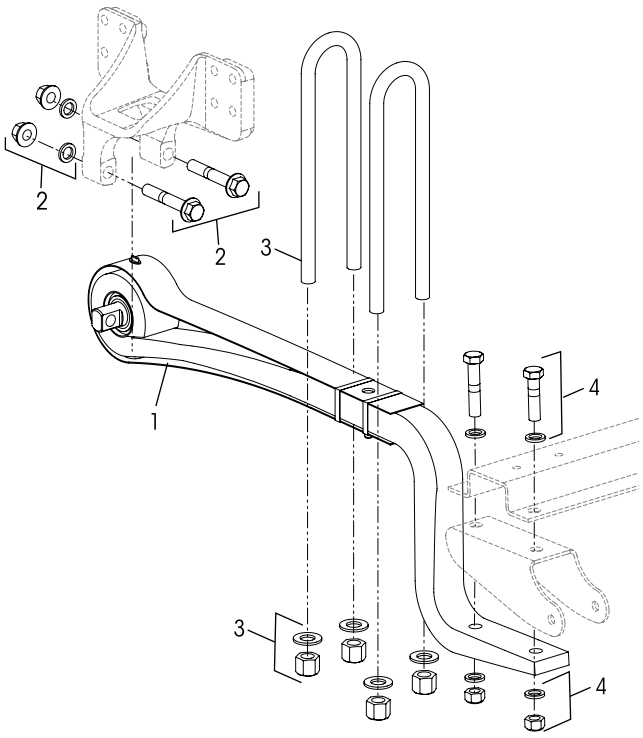

KEY NO.	PART NO.	DESCRIPTION	KIT QTY.
	091084-027	**Main Support Member Service Kit, One Side,** 1-leaf. Include key Nos.1-4	
50	082507-000	Main Support Member Assembly	1
51	091084-024	Frame Hanger to MSM Fastener Service Kit	1
52	091084-023	U-bolt Service Kit, One Side	1
53	091084-025	Cross Channel Fastener Services Kit	1

Service Kit No. 091084-023 | U-bolt Service Kit, One Side

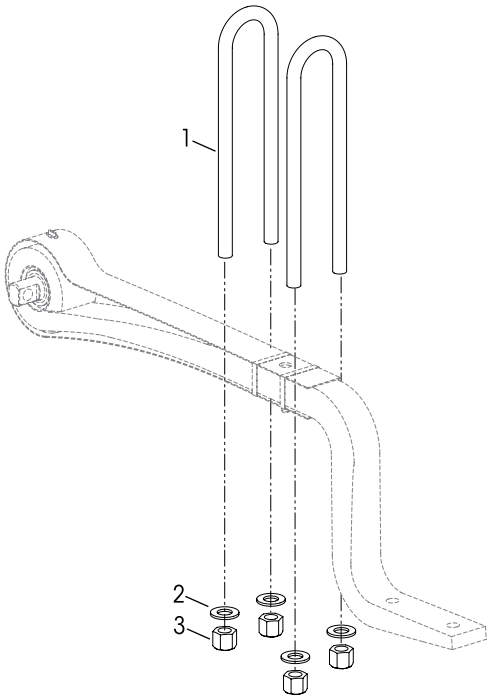

KEY NO.	PART NO.	DESCRIPTION	KIT QTY.
	091084-023	**U-bolt Service Kit, One Side,** Includes Key Nos. 1-3	
1		*M24 X 2-6g X 425 mm U-bolt	2
2		*M24 Hardened Flat Washer	4
3		*M24 X 2-6H Hex Nut	4

Service Kit No. 091084-024 | Frame Hanger Fasteners One Hanger

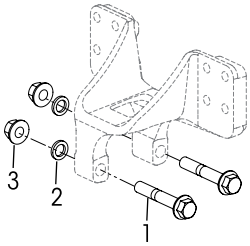

KEY NO.	PART NO.	DESCRIPTION	KIT QTY.
	091084-024	**Frame Hanger to MSM Fastener Service Kit, One Hanger,** Includes Key Nos. 1-3	
1		*M20 X 1.5-6g Flange Bolt	2
2		*M20 Flat Washer	2
3		*M20 X 1.5-6H Flange Nut	2

Service Kit No. 091084-025 | Cross Channel Fasteners

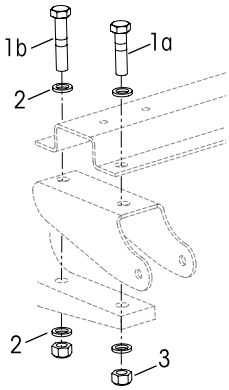

KEY NO.	PART NO.	DESCRIPTION	KIT QTY.
	091084-025	**Cross Channel Fastener Services Kit,** Includes Key Nos. 1-3	
1		*M20 X 2.5-6g Bolt	2
a		100 mm	
b		80 mm	
2		*M20 Flat Washer	4
3		*M20 X 2.5-6H Hex Nut	2

* Item included in service kit only, part not sold separately.

COMFORT AIR Service Kits

Service Kit No. 091084-026 | Height Control Valve Lower Bracket and Fasteners

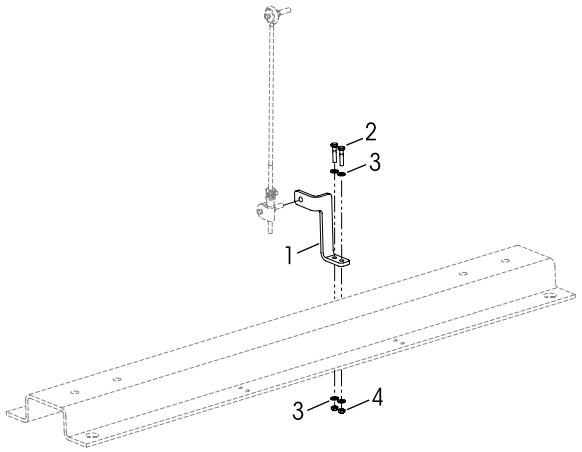

KEY NO.	PART NO.	DESCRIPTION	KIT QTY.
	091084-026	**Height Control Valve Lower Bracket Service Kit,** Includes Key Nos. 1-4	
1		*Height Control Valve Linkage Rod Lower Bracket	1
2		*M6 X 1.0-6g X 30 Hex Cap Screw	2
3		*M6 Metric Flat Washer	4
4		*M6 X 1.0-6H Nut	2

* Item included in service kit only, part not sold separately.

CROSS REFERENCE

HENDRICKSON PART NO.	BYD PART NO.	DESCRIPTION
022186-000	T011N01-2911151	Torque Rod Bracket
049689-000	T011N01-2911151A	Torque Rod Shim
058994-072		Height Control Valve Linkage Rod Assembly, 370 mm
078101-205	T011N01-2911121	Frame Hanger
078325-400		Lower Shock Bracket
078327-208	T011N01-2911132	Cross Channel
079288-101	T011N01-2911030A	Air Spring Assembly, Includes Upper Bracket
079290-007		Height Control Valve Assembly
079291-005		Height Control Valve Mounting Bracket
080460-070	T011N01-2911151B	Torque Rod Spacer
080777-000	T011N01-2911070	Axle Stop
080894-001	T011N01-2911112A	Spring Seat Spacer
080993-001	T011N01-2911141	Upper Shock Bracket
082507-000	T011N01-2911020A	Main Support Member Assembly
091009-000	T011N01-2911171	Top Pad
091011-150	T011N01-2911111A	Spring Seat – 5°
091084-023		U-bolt Service Kit, One Side
091084-024		Frame Hanger to MSM Fastener Service Kit, One Hanger
091084-025		Cross Channel Fastener Services Kit
091084-026		Height Control Valve Lower Bracket Service Kit
091084-027		Main Support Member Service Kit, One Side
091336-015	T011N01-2911040	Shock Absorber
091838-050	T011N01-2911111	Bottom Cap – 5°
091906-585	T011N01-2911050	Torque Rod, 585 mm

SECTION 5
Preventive Maintenance

Following appropriate inspection procedures is important to help ensure the proper maintenance and operation of the COMFORT AIR suspension system and component parts function to their highest efficiency. Look for bent or cracked parts. Replace all worn or damaged parts.

HENDRICKSON RECOMMENDED PREVENTIVE MAINTENANCE INTERVALS

- Preparation for delivery
- The first 1,600 kilometers
- On-highway – 32,000 kilometers or every 6 months, whichever comes first

COMPONENT INSPECTION

- **Air spring –** Look for chafing or any signs of spring or component damage. Ensure that the upper bead plate is tight against the underside of the frame. Check for any lateral slippage at the lower air spring bracket Replace all worn or damaged parts.
- **Clamp group –** Visually inspect for any loose or damaged fasteners. Verify the U-bolt hex nuts have the proper torque values maintained. See the U-bolt Clamp Group Connection in this section.
- **Cross channel –** Check for cracks, damage, metal shavings, or looseness at the main support member connection. Replace all worn or damaged parts.
- **Fasteners –** Look for any loose or damaged fasteners on the entire suspension. Make sure all fasteners are tightened to a torque value within the specified torque range. See Torque Specifications section of this publication for recommended torque requirements. Use a calibrated torque wrench to check torque in a tightening direction. As soon as the fastener starts to move, record the torque. Correct the torque if necessary. Replace any worn or damaged fasteners with genuine specified fasteners.
- **Frame hanger –** Check for any signs of loosening or damage at the main support member connections. Check for cracks, damage, or any signs of looseness at the mounting fasteners. Replace all worn or damaged parts.
- **Height control valve and air lines –** Check the suspension air system for air leaks. Check all air lines for proper routing. Check for chafing or pinched air lines. Check the height control valve linkage for damage or interference with peripheral components. Replace all worn or damaged parts.
- **Main support member assembly –** Look for signs of looseness, cracks, or other damage. Inspect the cross channel connection for looseness or damage. Inspect isolator puck for wear or damage. Inspect flexi wrap for signs of looseness or damage. Check torque on bushing,cross channel and U-bolts. Correct the torque if necessary. Replace all worn or damaged parts.
- **Shock absorbers** — Visually inspect for any signs of dents or leakage. Misting is not considered a leak, see Shock Absorber Inspection in this section.
- **Tire wear –** Inspect the tires for wear patterns that may indicate suspension damage or misalignment. Replace all worn or damaged parts.
- **Torque rods –** All torque rods must be inspected for looseness, torn or shredded rubber, and for proper torque. If there is metal-to-metal contact in the bushing joint, this is a sign of excessive bushing wear and the bushing needs to be replaced. Replace all worn or damaged parts.
- **Wear and damage –** Inspect all parts of the suspension for wear and damage. Look for bent or cracked parts. Replace all worn or damaged parts.

See vehicle manufacturer's applicable publications for other preventive maintenance requirements.

U-BOLT CLAMP GROUP

NOTE Hendrickson U-bolt clamp group hardware for the COMFORT AIR suspension are Geomet coated M24 U-bolts and hex nuts.

WARNING IT IS IMPORTANT THAT THE U-BOLT CLAMP GROUP CONNECTION BE PROPERLY ALIGNED AND HAVE THE PROPER TIGHTENING TORQUE VALUES MAINTAINED. METAL SURFACES CAN WORK AND WEAR AGAINST OTHER RELATED CLAMP GROUP COMPONENTS IF NOT PROPERLY ALIGNED OR PROPERLY TIGHTENED TO MAINTAIN THE PROPER CLAMP FORCE. FAILURE TO DO SO CAN CAUSE PREMATURE COMPONENT WEAR, POSSIBLE SEPARATION OF THE CLAMP GROUP, CAUSING ADVERSE VEHICLE HANDLING, PROPERTY DAMAGE, OR PERSONAL INJURY.

Maintaining the correct U-bolt torque value is important to help ensure proper suspension component performance.

1. Inspect the U-bolts for proper seating of components, i.e. no gaps, etc.
2. U-bolt hex nuts must be torqued to specification, see Figure 5-1. **DO NOT** exceed specified torque on U-bolt hex nuts.

FIGURE 5-1

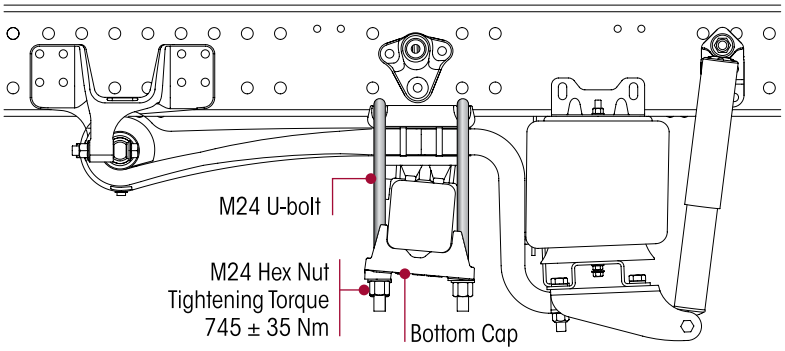

FIGURE 5-2

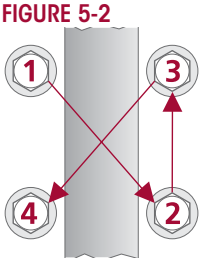

3. U-bolt hex nuts must be re-torqued at the following intervals:
   - At preparation for delivery.
   - At 1,600 km of service on a new vehicle or vehicle with serviced axle attachment assembly.
   - Thereafter follow the 6 months / 32,000 km visual inspection and annual re-torque interval.
4. Tighten the U-bolt hex nuts in the proper sequence, shown in Figure 5-2, evenly in 70 Nm increments to achieve uniform bolt tension to 745 ± 35 Nm torque.

AIR FITTING INSPECTION

1. If an air leak is suspected, begin by building up the air system to normal operating pressure.
2. Spray all nylon tube air fittings with a soapy water solution to detect the leak location.

NOTE Air lines and fittings may be inspected for leaks using a soapy water solution. The height control valve, however, cannot be inspected using this method. All height control valves have an allowable leakage rate.

3. If an air leak is located, ensure the tubing end is clean and in good condition and the end is cut square. Check to see if the tubing is binding, bent or being pulled upon.
4. Visually inspect the air fitting's O-ring seal for signs of damage or contamination.

TRANSVERSE TORQUE RODS

WARNING

THIS HENDRICKSON SUSPENSION REQUIRES TORQUE RODS FOR SUSPENSION PERFORMANCE AND VEHICLE STABILITY. IF THESE TORQUE RODS ARE DISCONNECTED OR ARE NON-FUNCTIONAL, DO NOT OPERATE THE VEHICLE. OPERATING A VEHICLE WITH DISCONNECTED OR NON-FUNCTIONAL TORQUE RODS CAN RESULT IN ADVERSE VEHICLE HANDLING, COMPONENT DAMAGE, SUSPENSION/VEHICLE DAMAGE, AND/OR SEVERE PERSONAL INJURY.

Visually inspect torque rod bushings for torn or shredded rubber, inspect for bent, cracked, or broken torque rods, and for end hubs with an elongated "oval" shape. Any of these conditions will require component replacement.

Torque rod looseness inspection is necessary. With the vehicle shut down, a lever check can be made with a long pry bar placed under each rod end and pressure applied.

Torque rod length is determined by the vehicle manufacturer to center the axles under the frame.

- If the lateral alignment of the axles is incorrect, it may be necessary to shim the transverse torque rod at the straddle mount end, see Figure 5-3. Refer to Lateral Alignment in the Alignment & Adjustments section of this publication.
- The transverse torque rods also control axle walk-out during cornering. The mounting brackets at the axle housing end of the torque rods are furnished and welded into position on the axle housings by the axle or vehicle manufacturer, see Figure 5-3.

FIGURE 5-3

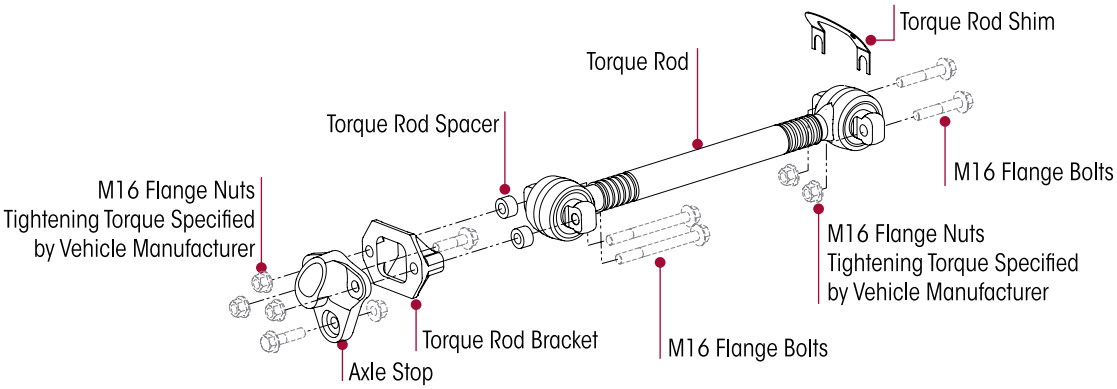

SHOCK ABSORBER

NOTE It is not necessary to replace shock absorbers in pairs if only one (1) shock absorber requires replacement.

Hendrickson uses a long service life, premium shock absorber on all COMFORT AIR suspensions. When the shock absorber replacement is necessary, Hendrickson recommends that the shock absorbers be replaced with identical Hendrickson Genuine parts for servicing. Failure to do so will affect the suspension performance, durability, and will void any applicable warranty. See vehicle manufacturer's applicable publications for other shock absorber inspection requirements.

Inspection of the shock absorber can be performed by doing a heat test, and a visual inspection. Replace as necessary, refer to the Component Replacement section of this publication.

FIGURE 5-4

HEAT TEST INSPECTION

1. Drive the vehicle at moderate speeds on rough road for minimum of fifteen minutes.

WARNING

DO NOT GRAB THE SHOCK ABSORBER AS IT COULD POSSIBLY BE HOT AND CAUSE PERSONAL INJURY.

2. Use an infrared thermometer to check the temperature of the shock absorber. This can also be performed by carefully touching the shock absorber body below the dust cover. Touch the frame to get an ambient reference, see Figure 5-4. A warm shock absorber is acceptable, a cold shock absorber should be replaced.
3. To inspect for an internal failure, remove and shake the suspected shock absorber. Listen for the sound of metal parts rattling inside. Rattling of metal parts can indicate that the shock absorber has an internal failure and the shock absorber should be replaced.

VISUAL INSPECTION

Look for these potential problems when doing a visual inspection. Inspect the shock absorbers fully extended. Replace as necessary.

FIGURE 5-5

SHOCK ABSORBER VISUAL INSPECTION - UNACCEPTABLE CONDITIONS

Damaged upper or lower mount | Damaged upper or lower bushing | Damaged dust cover and / or shock body | Bent or dented shock absorber | Improper installation Example: washer (if equipped installed backwards

LEAKING VS. MISTING SHOCK ABSORBER VISUAL INSPECTION

FIGURE 5-6

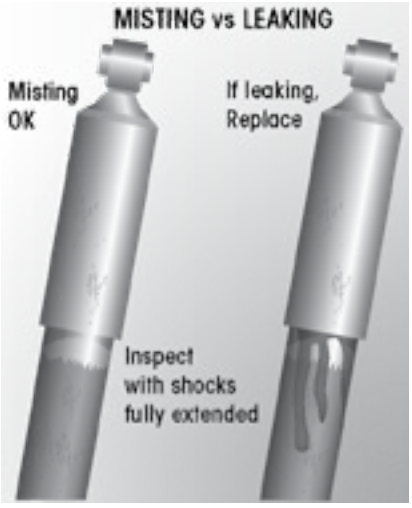

The inspection must not be conducted after driving in wet weather or a vehicle wash. The shock absorber needs to be free from water. Many shock absorbers are often misdiagnosed as failures. Misting is the process whereby very small amounts of shock absorber fluid evaporate at a high operating temperature through the upper seal of the shock absorber. When the "mist" reaches the cooler outside air, it condenses and forms a film on the outside of the shock absorber body. Misting is perfectly normal and necessary function of the shock absorber. The fluid which evaporates through the seal area helps to lubricate and prolong the life of the seal.

NOTE COMFORT AIR systems are equipped with a premium seal on the shock absorber, however this seal will allow for misting to appear on the shock absorber body (misting is not a leak and is considered acceptable).

Inspect the shock absorber fully extended. **A shock absorber that is truly leaking** will show signs of fluid **leaking in streams from the upper seal**. These streams can easily be seen, underneath the main body (dust cover) of the shock absorber. Replace as necessary.

SECTION 6
Alignment & Adjustments

RIDE HEIGHT ADJUSTMENT

The COMFORT AIR suspension for BYD vehicles is equipped with a height control valve located above the right air spring on the inside of the right frame rail. Refer to the Plumbing Diagram section of this publication.

1. Use a work bay with a level surface.
2. Relax the suspension by slowly moving the vehicle back and forth several times in a straight line without using the brakes. This will slacken or loosen the suspension as the vehicle is positioned. End with all wheels positioned straight ahead.
3. **DO NOT** set the parking brake. Chock the front wheels of the vehicle.
4. Verify the air system is at full operating pressure.
5. See Air Spring Warnings and Instructions in the Important Safety Notice section of this publication prior to deflating or inflating the air system.
6. Cycle the air system. Disconnect the height control valve arm from the rubber grommet. Lower the height control valve arm to exhaust the air in the air springs and deflate the suspension. Reconnect the height control valve arm to the rubber grommet to inflate the suspension.

- **Ride height** is measured at the bottom of the frame rail to the centerline of the axle as shown in Figure 6-1.

FIGURE 6-1

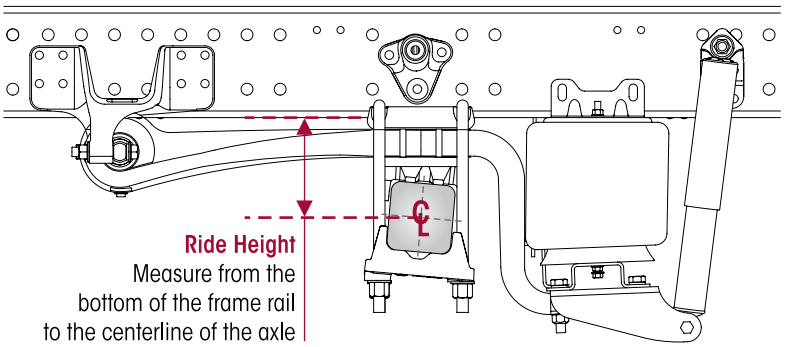

Capacity	Ride Height
8.5t	211.5 mm

7. If an adjustment is required, verify that the air system is at full operating pressure.

WARNING

PRIOR TO AND DURING DEFLATION AND INFLATION OF THE AIR SUSPENSION SYSTEM, ENSURE THAT ALL PERSONNEL AND EQUIPMENT ARE CLEAR FROM UNDER THE VEHICLE AND AROUND THE SERVICE AREA, FAILURE TO DO SO CAN CAUSE SERIOUS PERSONAL INJURY, DEATH, OR PROPERTY DAMAGE.

8. See additional Air Spring Cautions and Warnings in the Important Safety Notice section of this publication prior to deflating or inflating the air system.
9. Disconnect the height control valve arm from the rubber grommet. Lower the height control valve arm to exhaust the air from the air springs and deflate the rear suspension.
10. Refill the suspension by raising the height control valve arm by hand, so that the suspension is above the proper ride height.
11. Lower the height control valve arm to exhaust the air system until the suspension is at proper ride height.
12. Use a 3 mm wooden dowel rod (golf tee) to set the neutral position for the height control valve by aligning the hole in the height control valve arm with the hole in the height control valve cover, as shown in Figure 6-2. **DO NOT** use a metal rod or nail as this may cause damage to the height control valve.

FIGURE 6-2

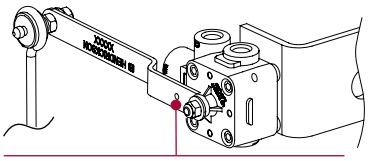

To set neutral position align hole with hole on height control valve cover.

13. Adjust the extension rod assembly so the rubber grommet can be reconnected to the height control valve arm at the proper height. Check the rubber components for any tearing or damage, replace as necessary.
14. Reconnect the height control valve arm to the rubber grommet.
15. Tighten the clamp on the adjustable valve arm joint with a screwdriver until securely fastened.
16. Remove the dowel from the height control valve.
17. If equipped with a suspension dump system in the cab, cycle the suspension air system by using the cab dump valve control. If not equipped with a dump valve, cycle the height control valve arm as stated in Steps numbers 4 through 6 above.
18. Recheck the ride height.
19. Repeat Steps 3 through 18 until the ride height is within specification.

SERVICE HINT It is very important that the leveling valve be cycled completely before and after any ride height adjustments. The cycling of the leveling valve will help make the adjustment more accurate. Be sure to maintain full system air pressure while setting or inspecting ride height.

NOTE During cycle operation of the height control valve it is normal to experience a limited amount of exhaust noise.

DRIVE AXLE ALIGNMENT INSPECTION

Proper alignment is essential for maximum ride quality, performance, and tire service life, the recommended alignment procedure is described below. This procedure should be performed after all repairs are completed and all suspension fasteners have been tightened to specified torque values.

1. Use a work bay with a level surface.
2. Relax the suspension by slowly moving vehicle back and forth several times in a straight line without using the brakes.
3. **DO NOT** set the parking brake.
4. Chock the front wheels of the vehicle.
5. Verify and maintain the air system at full operating pressure.
6. Verify the vehicle is at the correct ride height. Refer to Ride Height Adjustment in this section. Correct as necessary.
7. Verify all suspension components are in good condition. Repair or replace any worn or damaged suspension components before proceeding with the alignment process.
8. Ensure all drive axle tires are the same size and inflated to the correct tire pressure.
9. Use an alignment machine to calculate the drive axle readings.
10. If the measurements are:
    a. Within the vehicle manufacturer's specifications, then the rear drive axle alignment is acceptable. Proceed to check the pinion angles of the drive axles (Step 11).
    b. **NOT** within the vehicle manufacturer's specifications, contact the vehicle manufacturer.
11. After all drive axles are aligned, check the pinion angle of each drive axle with a digital protractor, see Figure 6-3. Refer to the vehicle manufacturer`s specifications for the required pinion angles.
    a. If all pinion angles are within the vehicle manufacturer's specifications then proceed to Step 12.
    b. If any pinion angle is out of the vehicle manufacturer's specifications it must be corrected. Follow the vehicle manufacturer's procedure.
12. Recheck measurements to confirm adjustments until the correct alignment and pinion angles are achieved.
13. When all drive axle alignments and pinion angles are within the vehicle manufacturer's specifications then the alignment procedure is complete.
14. Remove the wheel chocks.

AXLE PINION ANGLE

Drive axle pinion angles are established by the vehicle manufacturer.

To check the pinion angle:

1. Verify the suspension is at the proper ride height (see the Ride Height Inspection in this section).
2. Place a digital protractor on the axle housing as shown in Figure 6-3.
3. Verify the pinion angle is within the range specified by the vehicle manufacturer.
4. Contact the vehicle manufacturer if it is necessary to fine-tune the pinion angle.

FIGURE 6-3

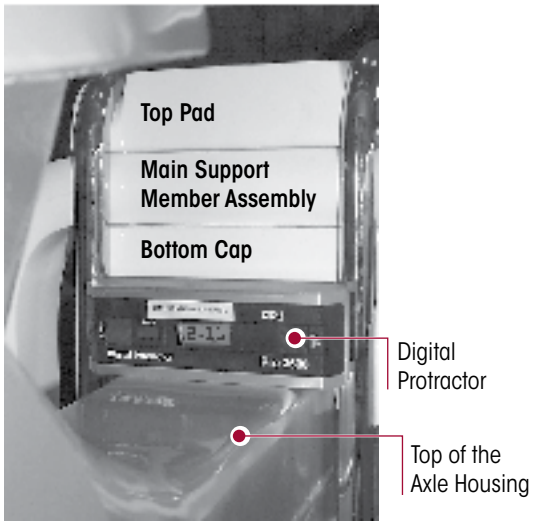

AXLE LATERAL ALIGNMENT

1. Use a work bay with a level surface.
2. Relax the suspension by slowly moving vehicle back and forth several times in a straight line without using the brakes. It is IMPORTANT when coming to a complete stop to verify the brakes are released.
3. **DO NOT** set the parking brake.
4. Chock the front wheels of the vehicle.

FIGURE 6-4

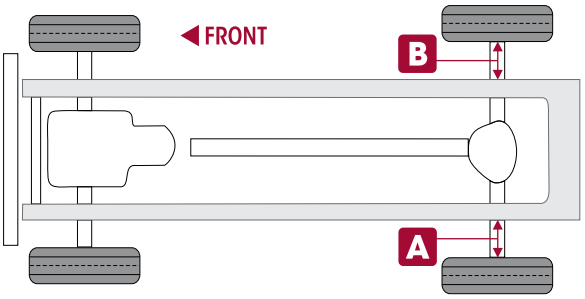

5. Measure from the outside of the frame rail to the rim flange of the inner tire. Record the measurement for dimensions **A** and **B**, see Figure 6-4.
6. Verify the axle lateral alignment is within the vehicle manufacturer's specifications. Adding or removing shims that are located between the transverse torque rod and the frame rail will normally correct the axle lateral alignment.
   - A general rule of thumb is to use a torque rod shim with a thickness that is half of the difference between the two measurements.

EXAMPLE

If the axle lateral alignment is out of specification by 6 mm, remove or install a 3 mm torque rod shim between the transverse torque rod and frame rail as needed, refer to Transverse Torque Rod in Component Replacement section of this publicaton.

SECTION 7
Component Replacement

FASTENERS

Hendrickson recommends when servicing the vehicle, replace all removed fasteners with new equivalent fasteners. Maintain correct torque values at all times. Check torque values as specified. See Hendrickson's Torque Specifications section in this publication. If non-Hendrickson fasteners are used follow torque specifications listed in the vehicle manufacturer's service manual.

HEIGHT CONTROL VALVE

DISASSEMBLY

1. Chock the wheels of the vehicle.

WARNING VEHICLE MUST BE FIRMLY SUPPORTED WITH SAFETY STANDS PRIOR TO SERVICING. FAILURE TO DO SO CAN RESULT IN PERSONAL INJURY OR PROPERTY DAMAGE.

2. Remove the height control valve's linkage assembly from the height control valve arm and lower mounting bracket by sliding the rubber grommets off their studs.

WARNING PRIOR TO AND DURING DEFLATION AND INFLATION OF THE AIR SUSPENSION SYSTEM, ENSURE THAT ALL PERSONNEL AND EQUIPMENT ARE CLEAR FROM UNDER THE VEHICLE AND AROUND THE SERVICE AREA, FAILURE TO DO SO CAN CAUSE SERIOUS PERSONAL INJURY, DEATH, OR PROPERTY DAMAGE.

3. See additional Air Spring Cautions and Warnings in the Important Safety Notice section of this publication prior to deflating or inflating the air system.
4. Lower the height control valve arm to exhaust the air in the air springs and deflate the rear suspension.
5. Remove the fasteners that attach the linkage assembly to the height control valve lower bracket.
6. Remove the air lines from the height control valve.
7. Remove the ¼" fasteners that attach the height control valve to the frame mounting bracket.
8. Remove the height control valve, see Figure 7-1.

FIGURE 7-1

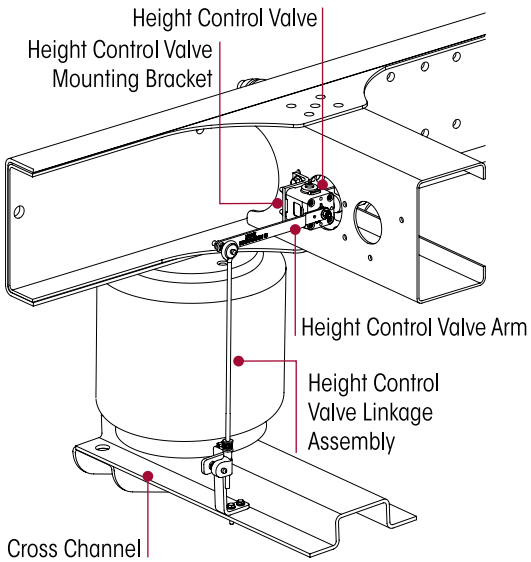

ASSEMBLY

1. Install the height control valve to the frame mounting bracket by attaching the ¼" Fasteners. Tighten to 9 ± 2 Nm torque, see Figure 7-2.
2. Install the linkage assembly to the height control valve arm by attaching the washer and locknut. Tighten to 14 ± 2 Nm torque, see Figure 7-2.
3. Install the height control valve linkage bracket to the cross channel by attaching the M6 fasteners. Tighten to 12 ± 2 Nm torque, see Figure 7-2.
4. Install the air lines to the height control valve. Refer to the Plumbing Diagram section of this publication.
5. See additional Air Spring Cautions and Warnings in the Important Safety Notice section of this publication prior to deflating or inflating the air system.

FIGURE 7-2

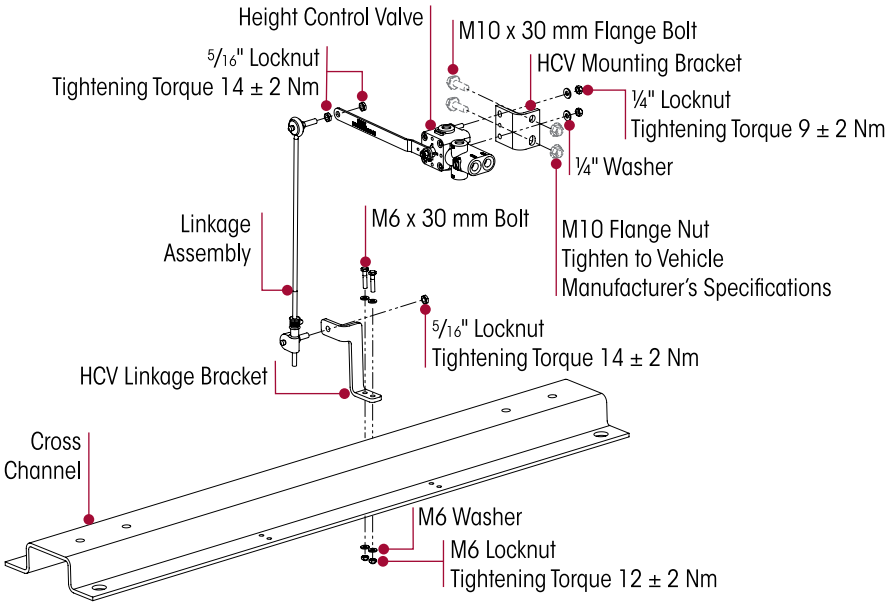

6. Inflate the suspension by connecting the height control valve linkage to the height control valve arm. Verify the air springs inflate uniformly without binding.
7. Remove the wheel chocks.
8. Verify the vehicle's ride height is within specifications, adjust as necessary, see Ride Height Adjustment in Alignment & Adjustments section of this publication.

AIR SPRING

DISASSEMBLY

1. Chock the front wheels.
2. Raise and support the frame of the vehicle at ride height with safety stands.

WARNING

THE VEHICLE MUST BE FIRMLY SUPPORTED WITH SAFETY STANDS PRIOR TO SERVICING. FAILURE TO DO SO CAN RESULT IN PERSONAL INJURY OR PROPERTY DAMAGE.

3. Disconnect the height control linkage assembly from the height control valve arm by sliding the rubber grommet from the stud.

WARNING

PRIOR TO AND DURING DEFLATION AND INFLATION OF THE AIR SUSPENSION SYSTEM, ENSURE THAT ALL PERSONNEL AND EQUIPMENT ARE CLEAR FROM UNDER THE VEHICLE AND AROUND THE SERVICE AREA, FAILURE TO DO SO CAN CAUSE SERIOUS PERSONAL INJURY, DEATH, OR PROPERTY DAMAGE.

4. See additional Air Spring Cautions and Warnings in the Important Safety Notice section of this publication prior to deflating or inflating the air system.
5. Lower the height control valve arm to exhaust the air in the air springs and deflate the rear suspension.
6. Remove the air line from the air spring.
7. Remove air fittings from air spring.
8. Remove the M12 lower air spring fasteners that connect air spring to the cross channel, see Figure 7-3.
9. Remove the M16 fasteners that connect upper air spring bracket to the frame, see Figure 7-3.
10. Remove the air spring.

FIGURE 7-3

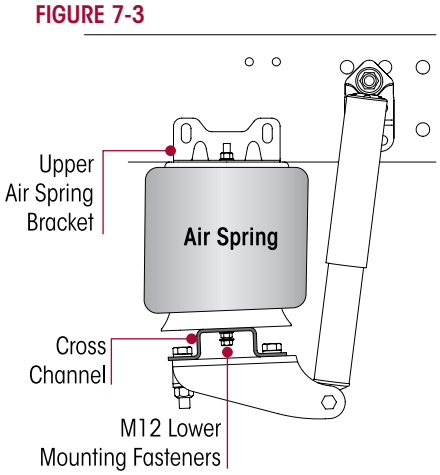

FIGURE 7-4

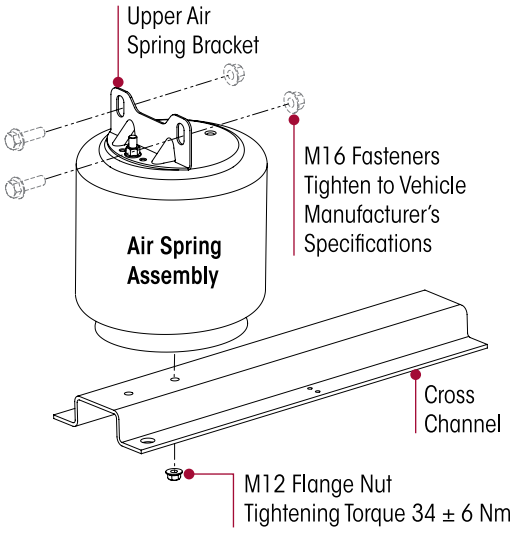

INSPECTION

1. Inspect the mounting surfaces and lower air spring mount for any damage. Replace as necessary.
2. Inspect upper air spring bracket for cracks. Replace as necessary.

ASSEMBLY

1. Install the air spring between the frame and cross channel, see Figure 7-3.
2. Install the air spring lower mounting- stud through the cross channel hole. Attach the M12 fasteners to the lower mounting stud of the air spring. **USING HAND TOOLS ONLY**, tighten the locknut to 34 ± 6 Nm torque, see Figure 7-4.
3. Install the air spring assembly to the frame. Attach the M16 fasteners and tighten to vehicle manufacturer's torque specifications.

CAUTION

FAILURE TO PRESS THE AIR SPRING AGAINST THE UNDERSIDE OF THE FRAME WHILE TIGHTENING THE UPPER AIR SPRING BRACKET CAN RESULT IN COMPONENT DAMAGE AND PERSONAL INJURY OR PROPERTY DAMAGE.

4. Install air fittings to air spring.
5. Connect the air line to the air spring.
6. See additional Air Spring Cautions and Warnings in the Important Safety Notice section of this publication prior to deflating or inflating the air system.
7. Inflate the suspension by connecting the height control valve linkage to the height control valve arm. Verify the air springs inflate uniformly without binding.
8. Remove the safety stands.
9. Remove the wheel chocks.
10. Verify the vehicle's ride height is within specifications. Adjust as necessary, see Ride Height Adjustment in Alignment & Adjustments section of this publication.

SHOCK ABSORBER

NOTE It is not necessary to replace shock absorbers in pairs if only one (1) shock absorber requires replacement.

FIGURE 7-5

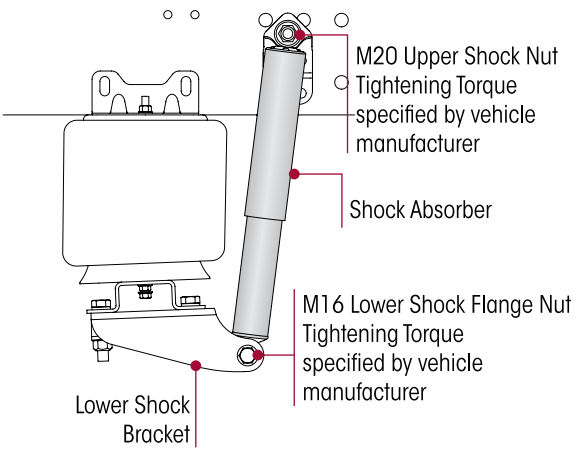

DISASSEMBLY

1. Chock the wheels of the vehicle.
2. Remove the M20 fasteners, that connect shock absorber to upper mounting bracket, see Figure 7-5.
3. Remove the M16 fasteners that connect shock absorber to lower shock bracket, see Figure 7-5.
4. Slide the shock absorber out of the lower mounting bracket.
5. Remove the shock absorber from the upper mounting bracket.

6. Inspect the shock absorber mounting brackets and hardware for damage or wear, and replace as necessary, see the Preventive Maintenance section of this publication.

ASSEMBLY

1. Install shock absorber to upper mounting bracket by attaching M20 fasteners.
2. Install shock absorber to lower shock bracket by attaching the M16 fasteners.
3. Tighten the lower M16 locknut to vehicle manufacturer's torque specifications.
4. Tighten the upper M20 locknut to to vehicle manufacturer's torque specifications, see Figure 7-5.
5. Remove the wheel chocks.
6. Verify the vehicle's ride height is within specifications. Adjust as necessary, see Ride Height Adjustment in Alignment & Adjustments section of this publication.

SHOCK ABSORBER LOWER MOUNTING BRACKET

DISASSEMBLY

1. Chock the front wheels.
2. Raise and support the frame of the vehicle at ride height with safety stands.

WARNING

THE VEHICLE MUST BE FIRMLY SUPPORTED WITH SAFETY STANDS PRIOR TO SERVICING. FAILURE TO DO SO CAN RESULT IN PERSONAL INJURY OR PROPERTY DAMAGE.

3. Disconnect the height control linkage assembly from the height control valve arm by sliding the rubber grommet from the stud.

WARNING

PRIOR TO AND DURING DEFLATION AND INFLATION OF THE AIR SUSPENSION SYSTEM, ENSURE THAT ALL PERSONNEL AND EQUIPMENT ARE CLEAR FROM UNDER THE VEHICLE AND AROUND THE SERVICE AREA, FAILURE TO DO SO CAN CAUSE SERIOUS PERSONAL INJURY, DEATH, OR PROPERTY DAMAGE.

4. See additional Air Spring Cautions and Warnings in the Important Safety Notice section of this publication prior to deflating or inflating the air system.
5. Lower the height control valve arm to exhaust the air in the air springs and deflate the rear suspension.
6. Remove the air lines from the air springs.
7. Remove the M20 fasteners that connect the shock absorber to the upper mounting bracket.
8. Remove the M16 fasteners that connect the shock absorber to the lower bracket, see Figure 7-6.
9. Slide the shock absorber out of the lower mounting bracket.
10. Remove the M20 fasteners that connect the cross channel and lower shock bracket to the main support member assembly on the affected side. Loosen the M20 bolts, washers and hex nuts on the opposite side.
11. Using a floor jack under the center of the cross channel, raise the cross channel slightly.
12. ve lower shock bracket.

INSPECTION

1. Inspect the shock absorber mounting brackets for damage or wear, and replace as necessary, see the Preventive Maintenance section of this publication.

ASSEMBLY

1. Install the lower shock absorber mounting bracket to the main support member.
2. Lower the cross channel on top of the main support member and the lower shock absorber mounting bracket.
3. Loosely install the two M20 bolt and washer through the cross channel holes, lower shock bracket and main support member on each end of the cross channel, see Figure 7-6.
4. Tighten the M20 cross channel fasteners to 395 ± 40 Nm torque.

FIGURE 7-6

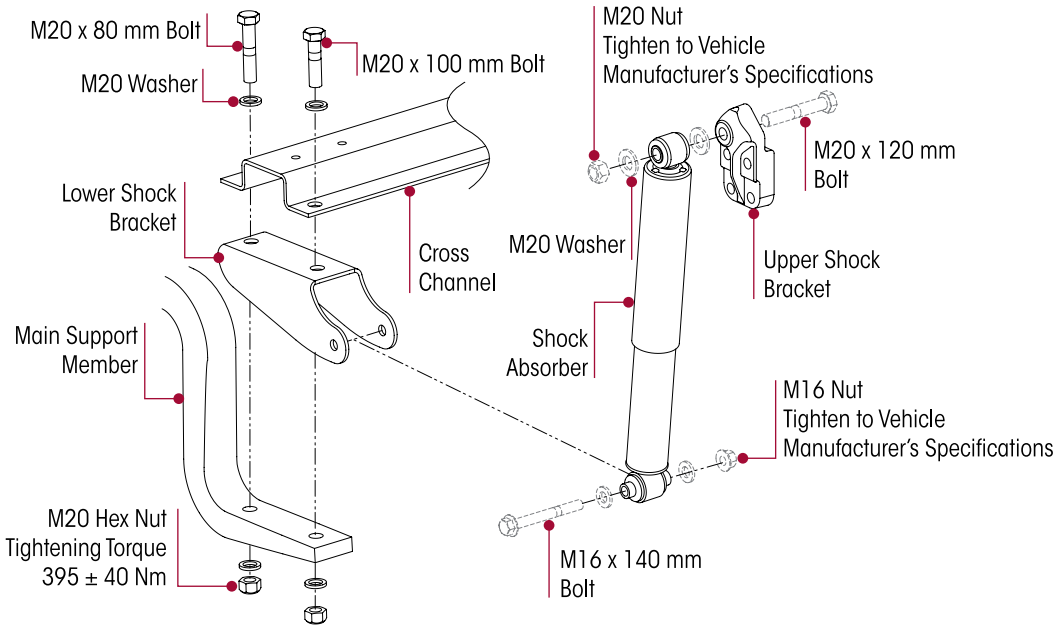

5. Slide the shock absorber lower mount into the lower shock absorber mounting bracket.
6. Install the M16 fasteners through the lower shock absorber mount and lower shock bracket. Tighten the fasteners to vehicle manufacturer's torque specifications, see Figure 7-6.
7. Install the upper M20 fasteners and tighten to vehicle manufacturer's torque specifications, see Figure 7-6.
8. Reconnect the air lines to the air springs.
9. See additional Air Spring Cautions and Warnings in the Important Safety Notice section of this publication prior to deflating or inflating the air system.
10. Inflate the suspension by connecting the height control valve linkage to the height control valve arm. Verify the air springs inflate uniformly without binding.
11. Remove the safety stands.
12. Remove the wheel chocks.
13. Verify the vehicle's ride height is within specifications. Adjust as necessary, see Ride Height Adjustment in Alignment & Adjustments section in this publication.

CROSS CHANNEL

DISASSEMBLY

1. Chock the front wheels.
2. Raise and support the frame of the vehicle at ride height with safety stands.

WARNING

THE VEHICLE MUST BE FIRMLY SUPPORTED WITH SAFETY STANDS PRIOR TO SERVICING. FAILURE TO DO SO CAN RESULT IN PERSONAL INJURY OR PROPERTY DAMAGE.

3. Remove the air springs as detailed in the "Air Spring Disassembly" in this section.
4. Remove the M6 height control valve linkage bracket fasteners to cross channel. Remove the bracket.
5. Remove the M20 bolts from the cross channel to main support member, see Figure 7-7.
6. Remove the cross channel.

INSPECTION

1. Inspect the mounting surfaces and lower air spring mount for any damage. Replace as necessary.
2. Inspect the upper air spring bracket for cracks. Replace as necessary.
3. Inspect the cross channel for straightness, excessive wear and cracks. Replace as necessary.

FIGURE 7-7

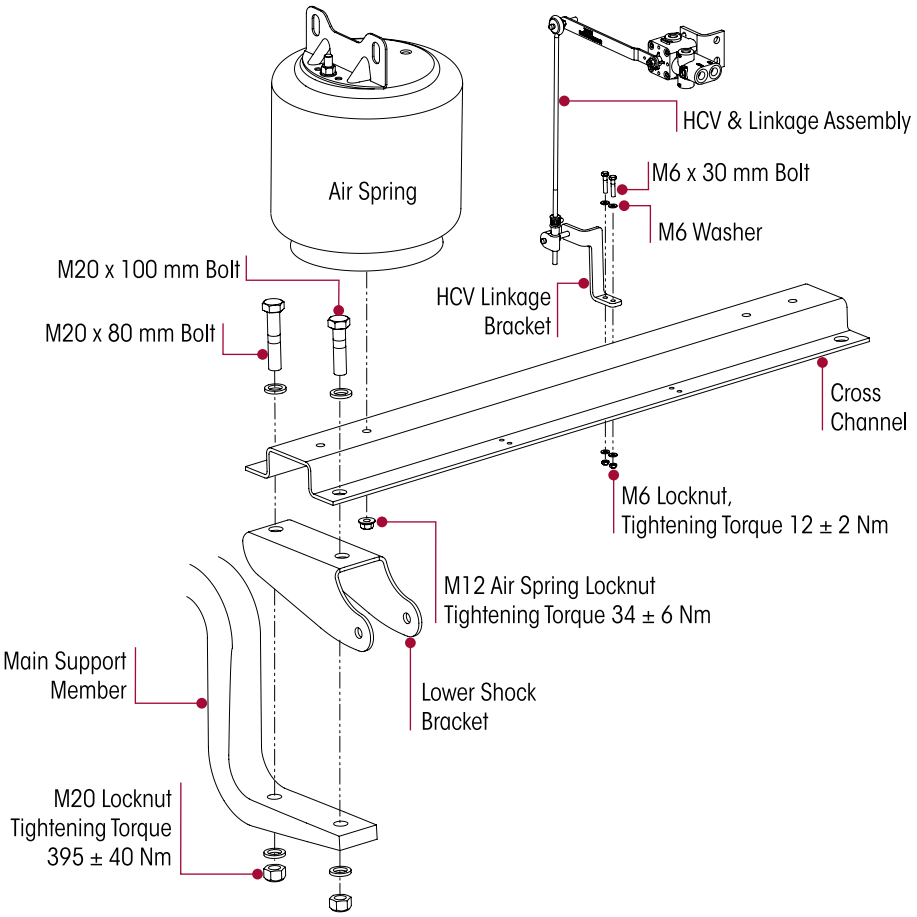

ASSEMBLY

1. Place cross channel on top of the lower shock bracket and main support member.
2. Loosely install the two M20 bolt and washer through the cross channel holes, lower shock bracket and main support member on each end of the cross channel, see Figure 7-7.
3. Tighten the cross channel fasteners to 395 ± 40 Nm torque, see Figure 7-7.
4. Install the height control valve lower bracket to the cross channel using two M6 fasteners. Tighten the fasteners to 12 ± 2 Nm torque.
5. Install the air spring between the frame and cross channel.
6. Install the air spring lower mounting stud through the cross channel hole. Attach the M12 fasteners to the lower mounting stud of the air spring. **USING HAND TOOLS ONLY**, tighten the flange nut to 34 ± 6 Nm torque.

WARNING

FAILURE TO PRESS THE AIR SPRING AGAINST THE UNDERSIDE OF THE FRAME WHILE TIGHTENING THE UPPER AIR SPRING BRACKET CAN RESULT IN COMPONENT DAMAGE AND PERSONAL INJURY OR PROPERTY DAMAGE.

7. Install the air spring assembly to the frame and tighten the fasteners to vehicle manufacturer's torque specifications.
8. Connect the air line to the air spring.
9. See additional Air Spring Cautions and Warnings in the Important Safety Notice section of this publication prior to deflating or inflating the air system.
10. Inflate the suspension by connecting the height control valve linkage to the height control valve arm. Verify the air springs inflate uniformly without binding.
11. Remove the safety stands.
12. Remove the wheel chocks.
13. Verify the vehicle's ride height is within specifications, adjust as necessary, see Ride Height Adjustment in Alignment & Adjustments section of this publication.

CLAMP GROUP

- TOP PAD
- SPRING SEAT SPACER
- SPRING SEAT
- BOTTOM CAP

WARNING

THE PROCEDURE TO DISASSEMBLE THE CLAMP GROUP IS DONE WITH THE OTHER MAIN SUPPORT MEMBER PROPERLY CONNECTED TO THE FRAME HANGER AND AXLE. FAILURE TO HAVE THE OTHER MAIN SUPPORT MEMBER CONNECTED PROPERLY COULD ALLOW THE AXLE TO SHIFT RESULTING IN POSSIBLE DAMAGE TO COMPONENTS AND/OR PERSONAL INJURY. IF THE OTHER MAIN SUPPORT MEMBER ISN'T PROPERLY CONNECTED TO THE FRAME HANGER AND AXLE IT WILL BE NECESSARY TO SUPPORT THE AXLE PINION TO KEEP THE AXLE FROM SHIFTING.

DISASSEMBLY

1. Chock the front wheels.
2. Raise and support the frame of the vehicle at ride height with safety stands.

WARNING

THE VEHICLE MUST BE FIRMLY SUPPORTED WITH SAFETY STANDS PRIOR TO SERVICING. FAILURE TO DO SO CAN RESULT IN PERSONAL INJURY OR PROPERTY DAMAGE.

3. Disconnect the height control linkage assembly from the height control valve arm by sliding the rubber grommet from the stud.

WARNING

PRIOR TO AND DURING DEFLATION AND INFLATION OF THE AIR SUSPENSION SYSTEM, ENSURE THAT ALL PERSONNEL AND EQUIPMENT ARE CLEAR FROM UNDER THE VEHICLE AND AROUND THE SERVICE AREA, FAILURE TO DO SO CAN CAUSE SERIOUS PERSONAL INJURY, DEATH, OR PROPERTY DAMAGE.

4. See additional Air Spring Cautions and Warnings in the Important Safety Notice section of this publication prior to deflating or inflating the air system.
5. Lower the height control valve arm to exhaust the air in the air springs and deflate the rear suspension.
6. On the side being serviced, remove and discard the U-bolts, hex nuts and washers, see Figure 7-8.

FIGURE 7-8

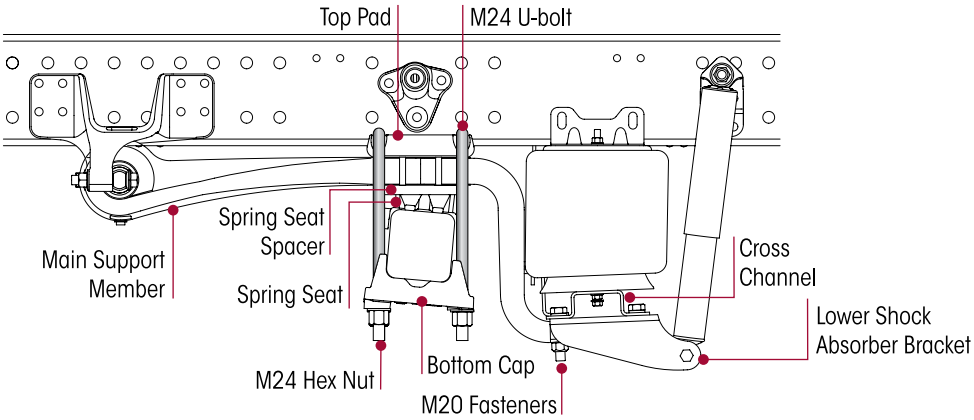

7. Remove the axle bottom cap and top pad.
8. Remove fasteners from cross channel on the opposite side from the side being serviced.

SERVICE HINT

Removing the cross channel bolts from the opposite side allows accessibility to the clamp group being serviced without removing the main support member and the air spring.

9. Place a floor jack under the cross channel near the main support member being serviced. Raise the cross channel and main support member enough to remove the spring seat from under the main support member.

INSPECTION

WARNING

FAILURE OF THE MAIN SUPPORT MEMBER WILL REQUIRE THE REPLACEMENT OF THE MAIN SUPPORT MEMBER AND ALL CLAMP GROUP COMPONENTS. FAILURE TO DO SO CAN RESULT IN CLAMP GROUP FAILURE AND FURTHER FAILURE TO THE MAIN SUPPORT MEMBER, WHICH CAN CAUSE ADVERSE VEHICLE HANDLING, PROPERTY DAMAGE OR SEVERE PERSONAL INJURY.

1. Inspect the main support member assembly for damage. Replace as necessary.
2. Inspect the top pad, spring seat and axle bottom cap for excessive wear and cracks or fretting. Replace as necessary.
3. Inspect the axle housing for any cracks or wear. Repair or replace as necessary.

ASSEMBLY

1. Install the spring seat on the axle housing making sure to engage the alignment locator on the axle housing with the hole in the bottom of the spring seat. Verify the thicker end of the spring seat is to the rear of the vehicle.
2. Lower the main support member assembly on the spring seat. Ensure the locator hole on the bottom of the main support member engages both the flexi wrap and spring seat locator holes.
3. Install top pad on the top of the main support member assembly. Ensure the locator hole on the bottom of the top pad engages the flexi wrap and main support member locator holes.

WARNING

U-BOLTS THAT ARE FOUND TO BE LOOSE REQUIRE THAT MATING COMPONENTS BE INSPECTED FOR SIGNS OF WEAR OR FRETTING. ANY COMPONENTS WORN MUST BE REPLACED. FAILURE TO DO SO CAN CAUSE PREMATURE CLAMP GROUP FAILURE, COMPONENT DAMAGE, ADVERSE VEHICLE HANDLING, PROPERTY DAMAGE, OR SEVERE PERSONAL INJURY. MAINTAIN CORRECT TORQUE VALUE AT ALL TIMES. CHECK TORQUE VALUES ON A REGULAR BASIS AS SPECIFIED.

4. Install **NEW** U-bolts, flat washers, and hex nuts.
5. Verify that the top pad, spacer (if equipped), bottom cap and bottom cap spacer (if equipped) are installed correctly.
6. Lower the cross channel onto the opposite side lower shock bracket and main support member. Install the two M20 bolt and washers through the cross channel, lower shock bracket and main support member. Loosely install the M20 locknuts and washers. **DO NOT** tighten at this time.

WARNING

IT IS IMPORTANT THAT THE U-BOLT CLAMP GROUP CONNECTION BE PROPERLY ALIGNED AND HAVE THE PROPER TIGHTENING TORQUE VALUES MAINTAINED. METAL SURFACES CAN WORK AND WEAR AGAINST OTHER RELATED CLAMP GROUP COMPONENTS IF NOT PROPERLY ALIGNED OR PROPERLY TIGHTENED TO MAINTAIN THE PROPER CLAMP FORCE. FAILURE TO DO SO CAN CAUSE PREMATURE COMPONENT WEAR, POSSIBLE SEPARATION OF THE CLAMP GROUP, CAUSING ADVERSE VEHICLE HANDLING, PROPERTY DAMAGE, OR PERSONAL INJURY.

7. Verify that the U-bolts are seated properly in the channels of the top pad, see Figure 7-9.
8. Verify the flexi wrap and main support member are centered in the frame hanger.
9. Snug U-bolts prior to tightening, applying a crisscross pattern, (approximately 136 Nm tightening torque), see Figure 7-9.
10. Tighten the M20 cross channel fasteners to 395 ± 40 Nm torque, refer to Cross Channel in this section.

FIGURE 7-9

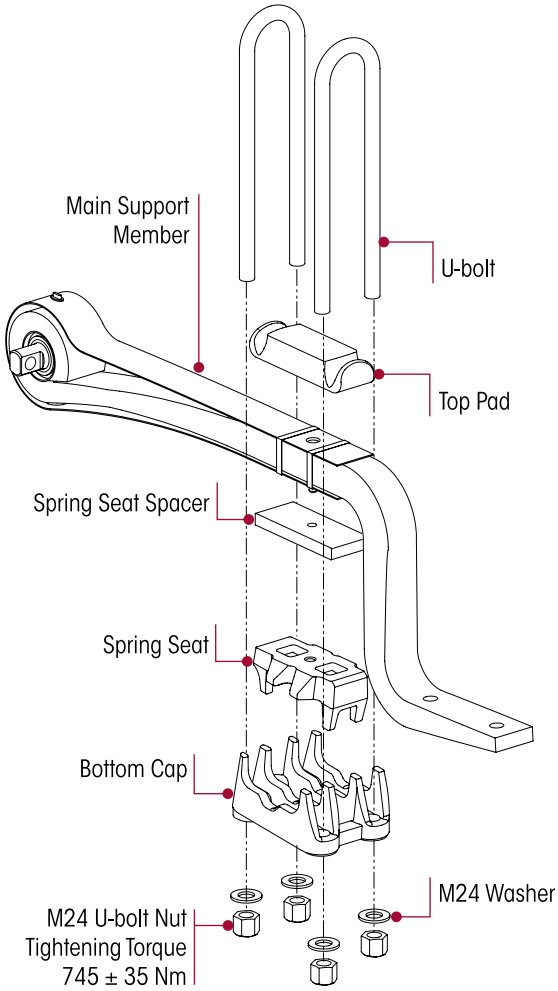

FIGURE 7-10

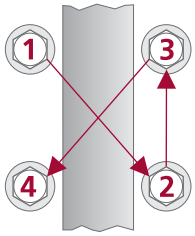

11. Tighten the U-bolt hex nuts in the proper sequence, shown in Figure 7-10, evenly in 70 Nm increments to achieve uniform bolt tension to 745 ± 35 Nm torque, see Figure 7-9.
12. Rap the top of the U-bolts with a dead blow mallet, and retighten to specified torque. **DO NOT** exceed specified torque on U-bolt hex nuts.
13. See additional Air Spring Cautions and Warnings in the Important Safety Notice section of this publication prior to deflating or inflating the air system.
14. See additional Air Spring Cautions and Warnings in the Important Safety Notice section of this publication prior to deflating or inflating the air system.
15. Inflate the suspension by connecting the height control valve linkage to the height control valve arm. Verify the air springs inflate uniformly without binding.
16. Remove the safety stands.
17. Remove the wheel chocks.
18. Verify the vehicle's ride height is within specifications. Adjust as necessary, see Ride Height Adjustment in Alignment & Adjustments section of this publication.
19. Align the vehicle. Alignment is necessary anytime the main support member is removed to complete the repair, see Alignment & Adjustments section of this publication.

MAIN SUPPORT MEMBER

CAUTION

THIS PROCEDURE TO REPLACE A MAIN SUPPORT MEMBER IS DONE WITH THE OTHER MAIN SUPPORT MEMBER PROPERLY CONNECTED TO THE FRAME HANGER AND AXLE. FAILURE TO HAVE THE OTHER MAIN SUPPORT MEMBER CONNECTED PROPERLY COULD ALLOW THE AXLE TO SHIFT RESULTING IN POSSIBLE DAMAGE TO COMPONENTS AND/OR PERSONAL INJURY. IF BOTH MAIN SUPPORT MEMBERS ARE TO BE REMOVED IT WILL BE NECESSARY TO SUPPORT THE AXLE PINION TO KEEP THE AXLE FROM SHIFTING.

DISASSEMBLY

1. Chock the front wheels.
2. Raise and support the frame of the vehicle at ride height with safety stands.

WARNING

THE VEHICLE MUST BE FIRMLY SUPPORTED WITH SAFETY STANDS PRIOR TO SERVICING. FAILURE TO DO SO CAN RESULT IN PERSONAL INJURY OR PROPERTY DAMAGE.

3. Remove the height control valve's linkage assembly from the height control valve arm and lower mounting bracket by sliding the rubber grommets off their studs.
4. Remove the air spring(s) per the Air Spring Disassembly instructions in this section.
5. On the side being serviced, remove and discard the U-bolts, hex nuts and washers.
6. On the side being serviced, remove M20 cross channel fasteners.
7. On the side being serviced, remove shock absorber and lower shock bracket.
8. Remove the top pad, spacer, spring seat and bottom cap.
9. Support the main support member by placing a hydraulic jack under the spring eye bushing.
10. Remove the M20 spring eye fasteners, see Figure 7-11.
11. Slide the spring eye bushing down and out of the frame hanger. Remove the main support assembly.

INSPECTION

WARNING

U-BOLTS THAT ARE FOUND TO BE LOOSE REQUIRE THAT MATING COMPONENTS BE INSPECTED FOR SIGNS OF WEAR OR FRETTING. ANY COMPONENTS WORN MUST BE REPLACED. FAILURE TO DO SO CAN CAUSE PREMATURE CLAMP GROUP FAILURE, COMPONENT DAMAGE, ADVERSE VEHICLE HANDLING, PROPERTY DAMAGE, OR SEVERE PERSONAL INJURY. MAINTAIN CORRECT TORQUE VALUE AT ALL TIMES. CHECK TORQUE VALUES ON A REGULAR BASIS AS SPECIFIED.

1. Inspect the frame hanger for excessive wear, cracks and proper frame hanger fastener torque. Replace as necessary.
2. Inspect the main support member for damage. Replace as necessary.
3. Inspect the top pad, spring seat and bottom cap for excessive wear and cracks or fretting. Replace as necessary.
4. Inspect the axle housing for any cracks or wear. Repair or replace as necessary.
5. Inspect the air spring for damage and inspect the lower piston and the upper air spring mount for cracks. Replace as necessary.

ASSEMBLY

WARNING

DO NOT STRIKE SUSPENSION COMPONENTS WITH A HAMMER. DO NOT NICK OR GOUGE THE MAIN SUPPORT MEMBER. SUCH IMPROPER ACTIONS CAN CAUSE DAMAGE; THE MAIN SUPPORT MEMBER ASSEMBLY COULD FAIL, AND CAUSE ADVERSE VEHICLE HANDLING AND POSSIBLE PERSONAL INJURY OR PROPERTY DAMAGE.

1. Position the main support member assembly on spring seat and spacer with the main support member assembly center locator piloting into hole in spring seat.
2. Align the bushing of the main support member assembly under the opening of the frame hanger and jack into place.
3. Loosely attach M20 frame hanger bolts.
4. Raise the rear of the main support member assembly and install the spring seat on the axle, engaging the locator holes.
5. Lower the main support member assembly onto the spring seat. Ensure the locator engages the locator hole in the spring seat.

FIGURE 7-11

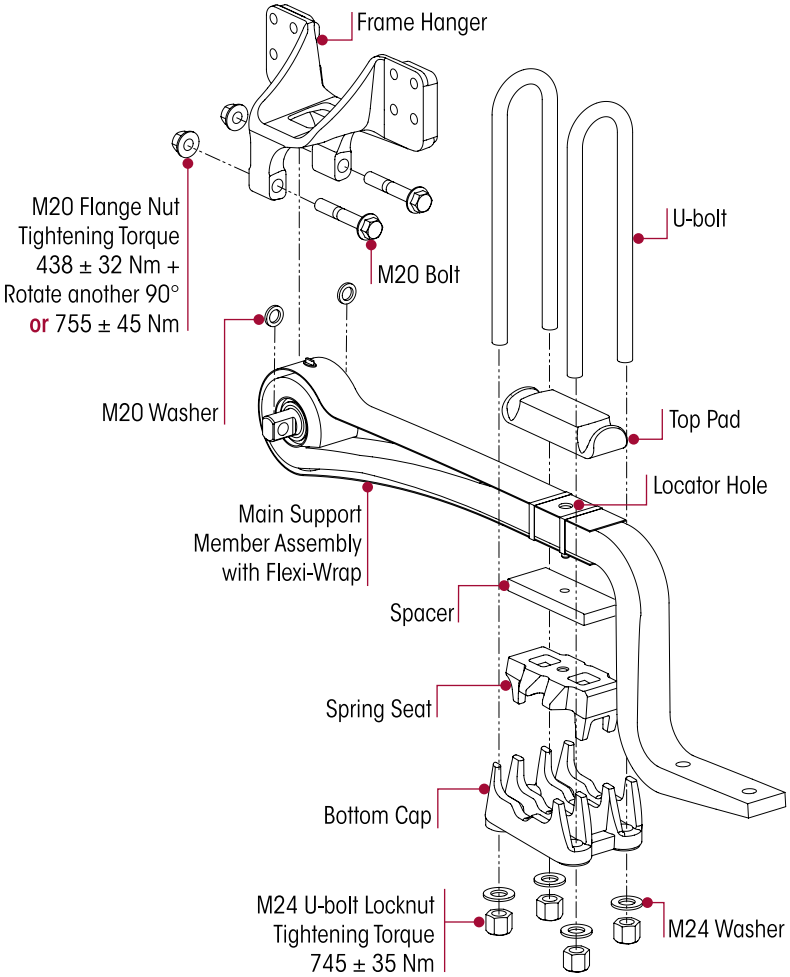

6. Install the top pad, spring seat spacer, bottom cap, U-bolts, washers, and hex nuts. Ensure all locators are engaged. Verify that the top pad and bottom cap are installed correctly, see Figure 7-11.
7. Verify that the U-bolts are seated properly in the channels of the top pad, see Figure 7-11.

FIGURE 7-12

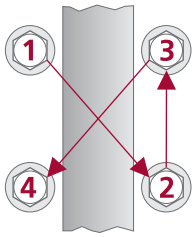

8. Snug U-bolts in a crisscross pattern, see Figure 7-12, **DO NOT** tighten at this time.
9. Install the shock absorber and the lower shock bracket onto the rear of the main support member assembly, see Figure 7-13.
10. Install the cross channel onto the rear of the main support member assemblies. Loosely install the cross channel retaining fasteners, see Figure 7-13.

SERVICE HINT It may be necessary to loosen the U-bolts in order to align the cross channel holes with the main support member assemblies. **DO NOT** strike suspension components with a hammer.

FIGURE 7-13

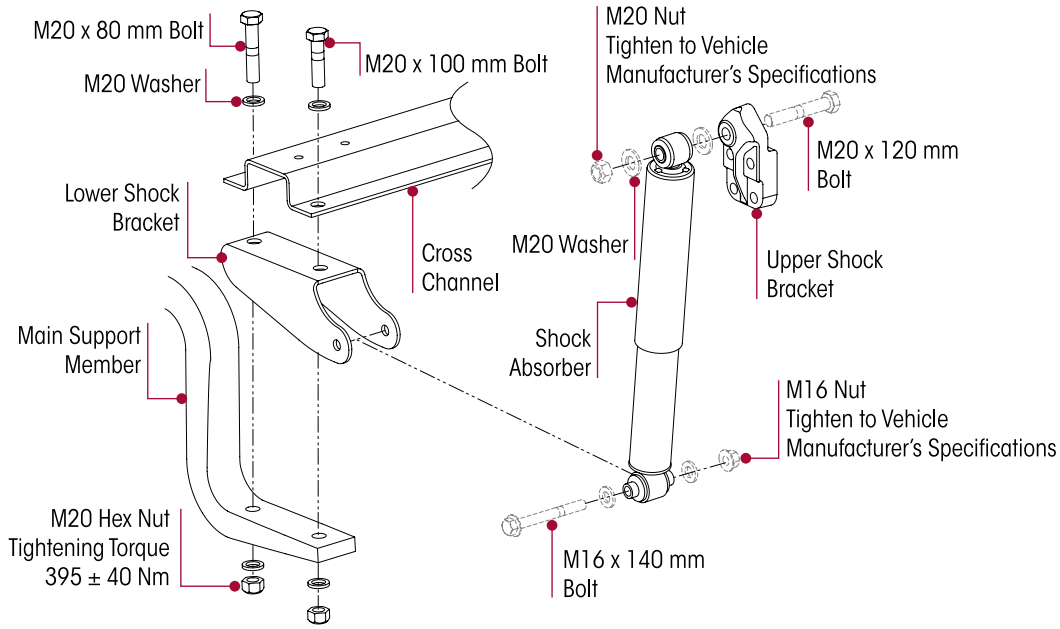

NOTE Prior to tightening the frame hanger fasteners, U-bolts, or cross channel fasteners to specifications, it is mandatory that the vehicle be positioned at the proper ride height.

11. Tighten the M20 cross channel fasteners to 395 ± 40 Nm torque, see Figure 7-13.
12. Tighten the U-bolt hex nuts in the proper sequence, shown in Figure 7-12, evenly in 70 Nm increments to achieve uniform bolt tension to 745 ± 35 Nm torque, see Figure 7-11.
13. Rap the top of the U-bolts with a dead blow mallet, and retighten to specified torque. **DO NOT EXCEED SPECIFIED TORQUE ON U-BOLT NUTS**.
14. Install the air spring lower mounting stud through the cross channel hole. Attach the M12 fasteners to the lower mounting stud of the air spring. **USING HAND TOOLS ONLY**, tighten the locknut to 34 ± 6 Nm torque.
15. See additional Air Spring Cautions and Warnings in the Important Safety Notice section of this publication prior to deflating or inflating the air system.
16. Inflate the suspension by connecting the height control valve linkage to the height control valve arm. Verify the air springs inflate uniformly without binding.
17. Remove the safety stands.
18. Remove the wheel chocks.
19. Verify the vehicle's ride height is within specifications. Adjust as necessary, see Ride Height Adjustment in Alignment & Adjustments section of this publication.

20. Verify that the axle is in proper alignment, see the Alignment & Adjustments section of this publication.
21. After the correct alignment of the axle is verified, tighten the frame hanger to main support member fasteners to 438 ± 32 plus 90° rotation or 755 ± 45 Nm torque.
22. Remove the wheel chocks.

FRAME HANGER

The frame hanger should function satisfactorily during normal vehicle operation. Replacement is required when the frame hanger has been damaged or worn.

DISASSEMBLY

1. Chock the front wheels.
2. Raise and support the frame of the vehicle at ride height with safety stands.

WARNING THE VEHICLE MUST BE FIRMLY SUPPORTED WITH SAFETY STANDS PRIOR TO SERVICING. FAILURE TO DO SO CAN RESULT IN PERSONAL INJURY OR PROPERTY DAMAGE.

3. Disconnect the height control valve's linkage assembly from the height control valve arm by sliding the rubber grommet from the stud.

WARNING PRIOR TO AND DURING DEFLATION AND INFLATION OF THE AIR SUSPENSION SYSTEM, ENSURE THAT ALL PERSONNEL AND EQUIPMENT ARE CLEAR FROM UNDER THE VEHICLE AND AROUND THE SERVICE AREA, FAILURE TO DO SO CAN CAUSE SERIOUS PERSONAL INJURY, DEATH, OR PROPERTY DAMAGE.

FIGURE 7-14

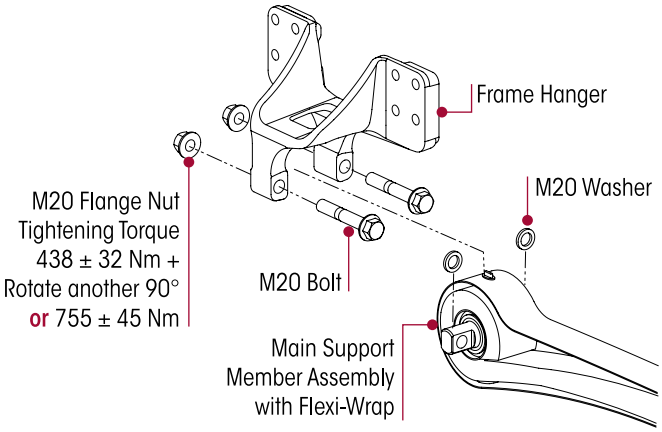

4. See additional Air Spring Cautions and Warnings in the Important Safety Notice section of this publication prior to deflating or inflating the air system.
5. Lower the height control valve arm to exhaust the air in the air springs and deflate the rear suspension.
6. Remove the M20 fasteners that connect the main support member to the frame hanger, see Figure 7-14.
7. Remove the fasteners that attach the frame hanger to the vehicle frame.
8. Remove the frame hanger.

INSPECTION

1. Inspect mounting surface of hanger and frame for any damage or wear. Repair or replace as necessary.
2. Inspect the main support member assembly and bushing for wear or damage. Replace as necessary.

ASSEMBLY

1. Slide the frame hanger over the main support member's bushing.
2. Install new hanger to frame rail fasteners as detailed by the vehicle manufacturer.

NOTE Prior to tightening the spring eye bolt to final torque specifications, it is mandatory that the vehicle be positioned at the proper ride height.

3. See additional Air Spring Cautions and Warnings in the Important Safety Notice section of this publication prior to deflating or inflating the air system.
4. Inflate the suspension by connecting the height control valve linkage to the height control valve arm per the vehicle manufacturer's instructions. Verify the air springs inflate uniformly without binding.
5. Remove the safety stands.
6. Verify the vehicle's ride height is within specifications per the vehicle manufacturer.

7. After the ride height verified tighten the spring eye fasteners to 438 ± 32 Nm + 90° rotation or 755 ± 45 Nm torque, see Figure 7-14.
8. Remove the wheel chocks.

TRANSVERSE TORQUE RODS

WARNING

THE COMFORT AIR SUSPENSION INCORPORATES TRANSVERSE RODS FOR VEHICLE STABILITY. IF THESE COMPONENTS ARE DISCONNECTED OR ARE NON-FUNCTIONAL THE VEHICLE SHOULD NOT BE OPERATED. FAILURE TO DO SO CAN RESULT IN ADVERSE VEHICLE HANDLING, POSSIBLE TIRE CONTACT WITH THE FRAME, SEVERE PERSONAL INJURY, AND PREMATURE COMPONENT DAMAGE.

NOTE

Torque rods assemblies equipped on the COMFORT AIR suspension have curled end hubs and are not re-bushable. The entire torque rod assembly must be replaced. This feature provides superior bushing retention in the torque rod end hub.

DISASSEMBLY

1. Chock the wheels of the vehicle.
2. Raise and support the frame of the vehicle at ride height with safety stands.

WARNING

THE VEHICLE MUST BE FIRMLY SUPPORTED WITH SAFETY STANDS PRIOR TO SERVICING. FAILURE TO DO SO CAN RESULT IN PERSONAL INJURY OR PROPERTY DAMAGE.

SERVICE HINT

Note the quantity and location of shims removed during disassembly. The same quantity must be reinstalled in the same location in order to maintain the lateral alignment of the axle prior to disassembly. The lateral alignment procedure will need to be performed after assembly, see Alignment & Adjustments section of this publication.

3. Remove and discard the M16 fasteners that connect the transverse torque rod to the frame bracket and axle, see Figure 7-15.
4. Remove the transverse torque rod.
5. Inspect the mounting surfaces for any wear or damage. Replace as necessary.
6. Inspect the torque rod for straightness, wear, or cracks, replace as necessary.

FIGURE 7-15

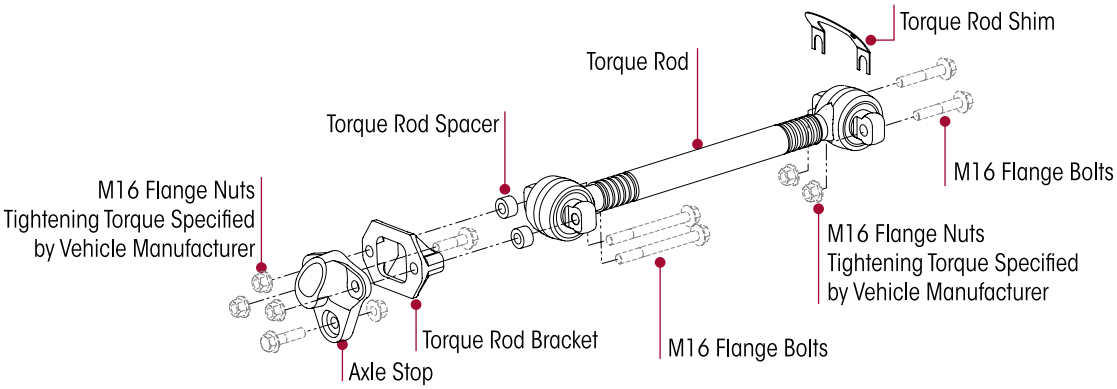

ASSEMBLY

1. Install the transverse torque rod.
2. Install the mounting fasteners and any shims that were removed.
3. Prior to tightening, ensure that the vehicle is at the proper ride height. Tighten all fasteners to the required torque specification. Refer to original equipment manufacturer for specifications.
4. Check the lateral alignment. If not within vehicle manufacturer's specified range, a lateral alignment is necessary. See Lateral Alignment in the Alignment & Adjustments section of this publication.
5. Remove the wheel chocks.
6. Remove the safety stands.

SECTION 8
Torque Specifications

HENDRICKSON RECOMMENDED TORQUE VALUES PROVIDED IN NEWTON METERS

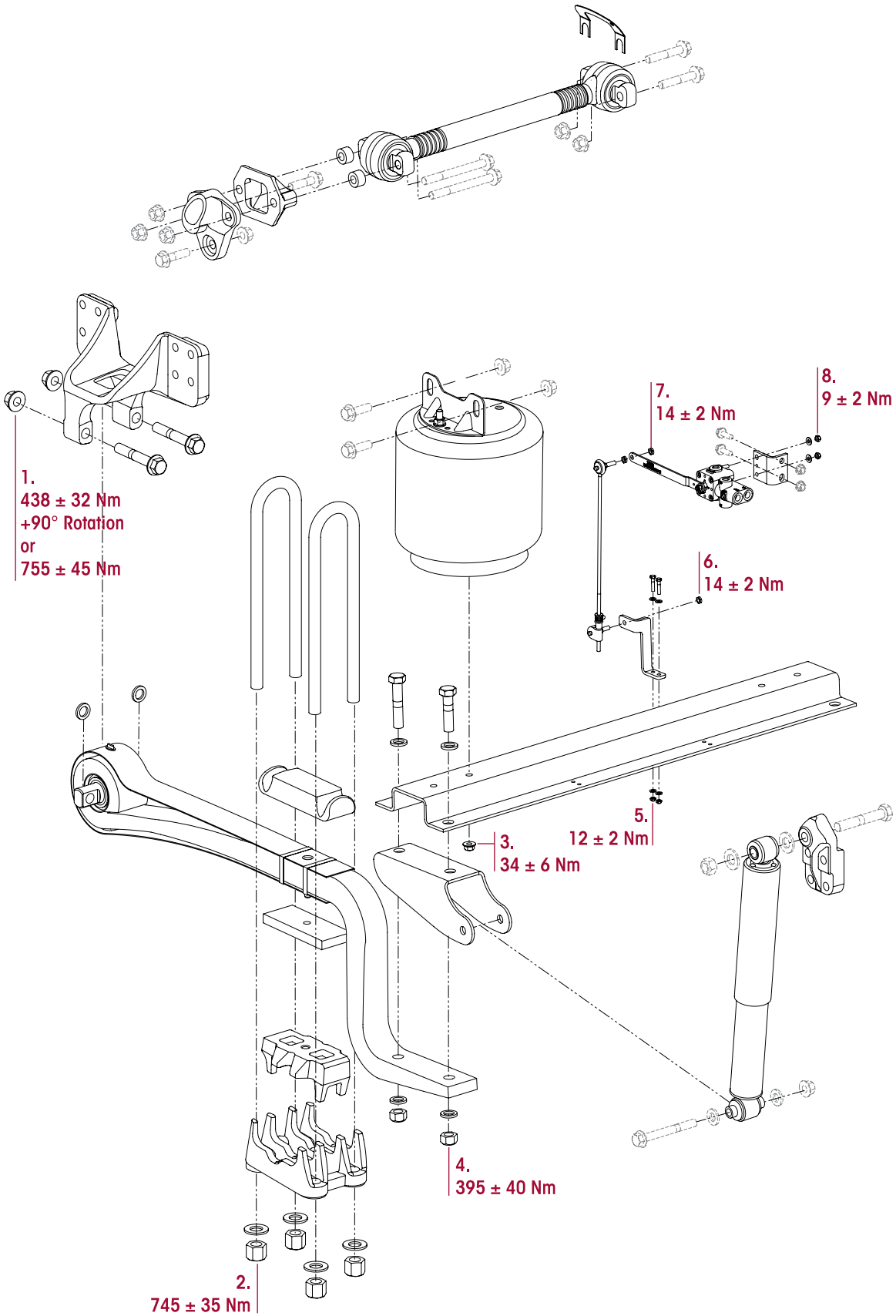

COMFORT AIR for BYD

HENDRICKSON RECOMMENDED TORQUE SPECIFICATIONS				
NO.	COMPONENT	QUANTITY	SIZE	*TORQUE VALUE Nm
1	Frame Hanger to Main Support Assembly	4	M20	438 ± 32 + 90° Rotation or 755 ± 45
2	Clamp Group U-bolts	8	M24	745 ± 35
3	Lower Air Spring Piston to Cross Channel	2	M12	34 ± 6
4	Cross Channel to Main Support Member	4	M20	395 ± 40
5	Cross Channel to HCV Linkage Bracket	2	M6	12 ± 2
6	HCV Linkage to HCV Linkage Bracket	1	5/16"	14 ± 2
7	HCV Linkage to Height Control Valve	1	5/16"	14 ± 2
8	Height Control Valve to HCV Mounting Bracket	2	1/4"	9 ± 2

NOTES: * Torque values listed above apply only if Hendrickson supplied fasteners are used. If non Hendrickson fasteners are used, follow torque specification listed in vehicle manufacturer's service manual.

SECTION 9
Troubleshooting Guide

COMFORT AIR for BYD

TROUBLESHOOTING GUIDE		
CONDITION	**POSSIBLE CAUSE**	**CORRECTION**
Vehicle bouncing excessively	Leaking shock absorber	Replace shock absorber.
	Damaged shock absorber	Replace shock absorber.
	Air spring(s) not inflated	Check air supply to air spring, repair as necessary.
	Incorrect ride height	Adjust ride height to proper setting. See Ride Height Adjustment in the Alignment & Adjustments section of this publication.
Suspension has harsh or bumpy ride	Broken main support member assembly	Replace main support member assembly.
	Damaged height control valve	Replace height control valve.
	Incorrect ride height	Adjust ride height to proper setting. See Ride Height Adjustment in the Alignment & Adjustments section of this publication.
Excessive driveline vibration	Incorrect ride height	Adjust ride height to proper setting. See Ride Height Adjustment in the Alignment & Adjustments section of this publication.
	Broken main support member assembly	Replace main support member assembly
	Air spring(s) not inflated	Check air supply to air spring, repair as necessary.
Vehicle leans	Broken main support member assembly	Replace main support member assembly.
	Axle connection not torqued correctly	Perform U-bolt re-torque procedure. See Torque Specification section of this publication.
	Worn pivot bushing	Replace pivot bushing.
	Air spring(s) not inflated	Check air supply to air spring, repair as necessary.
Suspension is noisy	Loose U-bolts	Perform U-bolt re-torque procedure. See the Preventive Maintenance section of this publication.
	Worn main support member isolator pads (if equipped)	Replace worn isolator pads (if equipped).
Irregular tire wear	Worn pivot bushing	Replace pivot bushing.
Main support member broken between U-bolts	Loose U-bolts	Replace main support member assembly and all mating parts.
Frame hanger worn	Loose fasteners and/or the re-use of old fasteners	Replace all worn parts and replace fasteners with new fasteners.

SECTION 10
Plumbing Diagrams

NOTE Comman example configuration shown. Contact vehicle manufacturer for specific plumbing requirements.

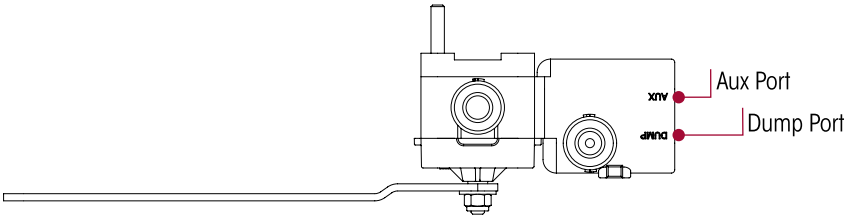

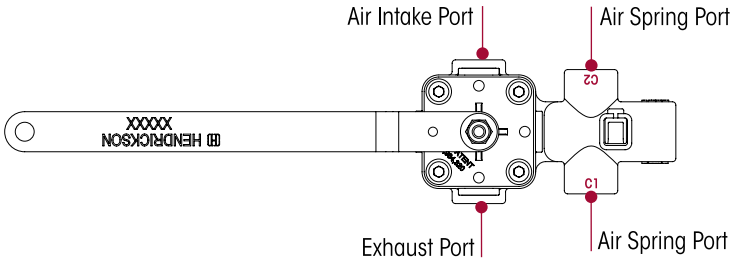

Actual product performance may vary depending upon vehicle configuration, operation, service and other factors.
All applications must comply with applicable Hendrickson specifications and must be approved by the respective vehicle manufacturer with the vehicle in its original, as-built configuration.
Contact Hendrickson for additional details regarding specifications, applications, capacities, and operation, service and maintenance instructions.

*Call Hendrickson at **+86 21 5876 5710** or **+86 531 8880 9055** for additional information.*

HENDRICKSON

www.hendrickson.com.cn

17730-359 Rev A 04-24

HENDRICKSON CHINA
Shanghai Add: Suite 2402B, Baoan Building,
800 Dongfang Road, Pudong New Dist,
Shanghai, 200127
+86 21 5876 5710
Fax +86 531 8880 9059

HENDRICKSON CHINA
Factory Add: No. 1668 North Section of Chunbo Road.
East New Dist of Jinan High Tech Industrial Development Zone,
Jinan, Shandong, P.R.C, 250104
+86 531 8880 9055
Fax +86 531 8880 9059

© 2024 Hendrickson USA, L.L.C. All Rights Reserved. All trademarks shown are owned by Hendrickson USA, L.L.C., or one of the affiliates, in one or more countries.
Information contained in this literature was accurate at the time of publication. Product changes may have been made after the copyright date that are not reflected.

Printed in China