TECHNICAL BULLETIN

Asia Pacific Region Only

No: 97117-232
Subject: HAS Rear Suspension Service Instructions
Date: September 2025 Revision: E

TABLE OF CONTENTS

SECTION 1: INTRODUCTION 2

SECTION 2: IMPORTANT SAFETY NOTICE 3

EXPLANATION OF SIGNAL WORDS 3
SAFETY PRECAUTIONS 4

SECTION 3: DESCRIPTION 7

SECTION 4: FIFTH WHEEL MOUNTING ANGLE CLEARANCE 10

SECTION 5: FRAME SLOPE 11

SECTION 6: SUSPENSION ALIGNMENT 12

SECTION 7: PREVENTATIVE MAINTENANCE 14

HAS FAMILY OF SUSPENSION PREVENTATIVE MAINTENANCE SCHEDULE 14
MAIN SUPPORT MEMBERS 17
U-BOLT LOCKNUTS 17
RIDE HEIGHT CONTROL VALVE SETTING 18
FRAME HANGER SLIPPER PADS 19

SECTION 8: COMPONENT REPLACEMENT 20

MAIN SUPPORT MEMBERS 20
SPRING SEATS 22
TORQUE ROD BUSH REPLACEMENT 23
FRAME HANGER SLIPPER PAD 25
SPRING HANGER STYLE INTEGRAL SLIPPER PAD WITH ROLL PIN 25
SPRING HANGER STYLE: INTEGRAL SLIPPER PAD WITH CLAMP 26
SPRING HANGER STYLE WRAP AROUND SLIPPER PAD 27
FRAME HANGERS 28
CROSS CHANNEL 29
AIR SPRING 30
STAMPED AIR SPRING FRAME HANGER 31
SHOCK ABSORBER OUTBOARD FRAME HANGER BRACKET 32
SHOCK ABSORBER OUTBOARD LOWER BRACKET 33
TRANSVERSE ROD 34
SHOCK ABSORBER – STANDARD 35
SHOCK ABSORBER – HI-TORQUE™ 35
HEIGHT CONTROL VALVE AND LINKAGE ARM ASSEMBLY 36

SECTION 9: HAS AIR PLUMBING DIAGRAM 38

SECTION 10: HAS SUSPENSION CRITICAL TORQUE SPECIFICATION CHART 39

AMENDMENT RECORD 40

COPYRIGHT ©2011 – 2025
HENDRICKSON ASIA PACIFIC PTY LTD
ALL RIGHTS RESERVED

HENDRICKSON

ABN 21 004 992 769
32-44 Letcon Drive/P.O. Box 1063,
Dandenong, South Vic 3175 Australia
Phone 61.3.8792 3600 Fax 61.3.8792.3699
www.hendrickson.com.au

SECTION 1: INTRODUCTION

This publication is intended to acquaint and assist maintenance personnel in the preventative maintenance, service, repair and rebuild of the HAS Series Tandem and Single air series suspension system.

The construction of the HAS Single air suspension is half of the HAS Tandem in appearance and in capacity as shown in Figures 1 and 2.

NOTE: Use only Hendrickson Genuine Parts for servicing this suspension system. Most Hendrickson parts can be identified by the Hendrickson trademark.

It is important to read and understand the entire Technical Procedure publication prior to performing any maintenance, service, repair or rebuild of this product. The information in this publication contains, safety information, product specifications, features, proper maintenance, service, repair and rebuild instructions for the HAS series of suspension.

Hendrickson reserves the right to make changes and improvements to its products and publications at any time. Contact Hendrickson Customer Support on +61 3 8792 3600 or email customerservice@hendrickson.com.au for more information.

Disclaimer: This publication is distributed with the understanding that the authors, editors and publishers are not responsible for the results of any actions or works of whatsoever kind based on the information contained in this publication, nor for any errors or omissions contained herein. The publishers, authors and editors expressly disclaim all and any liability to any person whomsoever in respect of the consequences of anything done or omitted to be done by any such person in reliance, whether whole or partial upon the whole or any part of the contents of this publication.

SECTION 2:
IMPORTANT SAFETY NOTICE

Proper maintenance, service and repair are important to the reliable operation of the tandem suspension. The procedures recommended by Hendrickson and described in this technical publication are methods of performing such maintenance, service and repair.

The warnings and cautions should be read carefully to help prevent personal injury and to assure that proper methods are used. Improper maintenance, service or repair may damage the vehicle, cause personal injury, render the vehicle unsafe in operation or void the manufacturer's warranty.

Failure to follow the safety precautions in this manual can result in personal injury and / or property damage. Carefully read and understand all safety related information within this publication, on all decals and in all such materials provided by the vehicle manufacturer before conducting any maintenance, service or repair.

EXPLANATION OF SIGNAL WORDS

Hazard "Signal Words" (Danger ● Warning ● Caution) appear in various locations throughout this publication. Information accented by one of these signal words must be observed to help minimise the risk of personal injury to service personnel or possibility of improper service methods which may damage the vehicle or render it unsafe.



This is the safety alert symbol. It is used to alert you to potential personal injury hazards. Obey all safety messages that follow this symbol to avoid possible injury or death.

Additional Notes or Service Hints are utilised to emphasise areas of procedural importance and provide suggestions for ease of repair. The following definitions indicate the use of these signal words as they appear throughout the publication.

DANGER INDICATES AN IMMINENTLY HAZARDOUS SITUATION WHICH, IF NOT AVOIDED, WILL RESULT IN SERIOUS INJURY OR DEATH.

WARNING INDICATES A POTENTIAL HAZARDOUS SITUATION WHICH, IF NOT AVOIDED, CAN RESULT IN SERIOUS INJURY OR DEATH.

CAUTION INDICATES A POTENTIAL HAZARDOUS SITUATION WHICH, IF NOT AVOIDED, MAY RESULT IN MINOR OR MODERATE INJURY.

NOTE:	An operating procedure, practice condition, etc. which is essential to emphasise.

SERVICE HINT:	A helpful suggestion that will make the servicing being performed a little easier and/or faster.

SAFETY PRECAUTIONS

WARNING

FASTENERS

DISCARD USED FASTENERS. ALWAYS USE NEW FASTENERS TO COMPLETE A REPAIR. FAILURE TO DO SO COULD RESULT IN FAILURE OF THE PART, OR MATING COMPONENTS, LOSS OF VEHICLE CONTROL, PERSONAL INJURY OR PROPERTY DAMAGE.

LOOSE OR OVER TORQUED FASTENERS CAN CAUSE COMPONENT DAMAGE, LOSS OF VEHICLE CONTROL, PROPERTY DAMAGE OR SEVERE PERSONAL INJURY. MAINTAIN CORRECT TORQUE VALUE AT ALL TIMES. CHECK TORQUE VALUES ON A REGULAR BASIS AS SPECIFIED, USING A REGULARLY CALIBRATED TORQUE WRENCH. TORQUE VALUES SPECIFIED IN THIS TECHNICAL PUBLICATION ARE FOR HENDRICKSON SUPPLIED FASTENERS ONLY. IF NON-HENDRICKSON FASTENERS ARE USED, FOLLOW TORQUE SPECIFICATION LISTED IN THE VEHICLE MANUFACTURER'S SERVICE MANUAL.

WARNING

LOAD CAPACITY

ADHERE TO THE PUBLISHED CAPACITY RATINGS FOR THE SUSPENSION. ADD-ON AXLE ATTACHMENTS AND OTHER LOAD TRANSFERRING DEVICES, SUCH AS LIFTABLE AXLES, CAN INCREASE THE SUSPENSION LOAD ABOVE ITS RATED AND APPROVED CAPACITIES, WHICH CAN RESULT IN COMPONENT DAMAGE AND LOSS OF VEHICLE CONTROL, POSSIBLY CAUSING PERSONAL INJURY OR PROPERTY DAMAGE.

WARNING

MODIFYING COMPONENTS

DO NOT MODIFY OR REWORK PARTS WITHOUT AUTHORISATION FROM HENDRICKSON. DO NOT SUBSTITUTE FOR REPLACEMENT PARTS NOT AUTHORISED BY HENDRICKSON. USE OF MODIFIED, REWORKED, SUBSTITUTE OR REPLACEMENT PARTS NOT AUTHORISED BY HENDRICKSON MAY NOT MEET HENDRICKSON'S SPECIFICATIONS, AND CAN RESULT IN FAILURE OF THE PART, LOSS OF VEHICLE CONTROL, AND POSSIBLE PERSONAL INJURY OR PROPERTY DAMAGE. USE ONLY HENDRICKSON AUTHORISED REPLACEMENT PARTS.

WARNING

TORCH / WELDING

DO NOT USE A CUTTING TORCH TO REMOVE ANY FASTENERS. THE USE OF HEAT ON SUSPENSION COMPONENTS WILL ADVERSELY AFFECT THE STRENGTH OF THESE PARTS. A COMPONENT DAMAGED IN THIS MANNER CAN RESULT IN THE LOSS OF VEHICLE CONTROL AND POSSIBLE PERSONAL INJURY OR PROPERTY DAMAGE.

WARNING

SHOCK ABSORBERS

THE SHOCK ABSORBERS ARE THE REBOUND TRAVEL STOPS FOR THE SUSPENSION. ANYTIME THE AXLE ON A HAS SUSPENSION IS SUSPENDED IT IS MANDATORY THAT THE SHOCK ABSORBERS REMAIN CONNECTED. FAILURE TO DO SO CAN CAUSE THE AIR SPRINGS TO SEPARATE FROM THE PISTON AND RESULT IN PREMATURE AIR SPRING FAILURE. REPLACEMENT OF SHOCK ABSORBERS WITH NON-HENDRICKSON PARTS CAN ALTER THE REBOUND TRAVEL OF THE SUSPENSION.

WARNING

TRANSVERSE RODS

THE HAS SUSPENSION INCORPORATES TRANSVERSE RODS FOR VEHICLE STABILITY. IF THESE COMPONENTS ARE DISCONNECTED OR ARE NON-FUNCTIONAL THE VEHICLE SHOULD NOT BE OPERATED. FAILURE TO DO SO CAN RESULT IN ADVERSE VEHICLE HANDLING AND POSSIBLE TYRE CONTACT WITH THE FRAME.

WARNING

AIR SPRING INFLATION AND DEFLATION

PRIOR TO DISASSEMBLY OF THE SUSPENSION, AIR SPRING ASSEMBLIES MUST BE DEFLATED. UNRESTRICTED AIR SPRING ASSEMBLIES CAN VIOLENTLY SHIFT. DO NOT INFLATE AIR SPRING ASSEMBLIES WHEN THEY ARE UNRESTRICTED. AIR SPRING ASSEMBLIES MUST BE RESTRICTED BY SUSPENSION OR OTHER ADEQUATE STRUCTURE. DO NOT INFLATE BEYOND PRESSURES RECOMMENDED BY AIR SPRING MANUFACTURER, CONTACT HENDRICKSON TECHNICAL SERVICES FOR DETAILS. IMPROPER USE OR OVER INFLATION MAY CAUSE AIR SPRING ASSEMBLIES TO BURST, CAUSING PROPERTY DAMAGE AND/OR SEVERE PERSONAL INJURY.

PRIOR TO AND DURING DEFLATION AND INFLATION OF THE AIR SUSPENSION SYSTEM, ENSURE ALL PERSONNEL AND EQUIPMENT ARE CLEAR FROM UNDER THE VEHICLE AND AROUND THE SERVICE AREA, FAILURE TO DO SO CAN CAUSE SERIOUS PERSONAL INJURY, DEATH OR PROPERTY DAMAGE.

CAUTION

AIR SPRING INFLATION

INFLATE THE SUSPENSION SLOWLY AND MAKE SURE THE RUBBER BLADDER OF THE AIR SPRING INFLATES UNIFORMLY AND IS NOT BINDING. FAILURE TO DO SO CAN CAUSE DAMAGE TO THE AIR SPRING AND/OR MOUNTING BRACKETS AND VOID WARRANTY.

CAUTION

AIR SPRING LOWER MOUNTING STUDS

IF THE AIR SPRING IS BEING REMOVED, IT IS MANDATORY TO LUBRICATE THE LOWER AIR SPRING FASTENERS WITH PENETRATING OIL AND REMOVE WITH HAND TOOLS TO PREVENT DAMAGE TO THE LOWER AIR SPRING MOUNTING STUD. FAILURE TO DO SO CAN CAUSE COMPONENT DAMAGE AND VOID WARRANTY.

WARNING

AIR SPRING PRESSURE RETENTION

SOME VEHICLE APPLICATIONS, SUCH AS VEHICLES EQUIPPED WITH OUTRIGGERS, RETAIN SOME AIR PRESSURE IN THE AIR SPRINGS AT ALL TIMES. PRIOR TO PERFORMING ANY MAINTENANCE, SERVICE OR REPAIR OF THE SUSPENSION, VERIFY EACH AIR SPRING IS COMPLETELY DEFLATED. FAILURE TO DO SO COULD RESULT IN SERIOUS PROPERTY DAMAGE AND/OR SEVERE PERSONAL INJURY.

WARNING

WORK SITE DUMPING

WHEN THE BED OF THE TRUCK/TRAILER IS LIFTED IT IS MANDATORY TO COMPLETELY EXHAUST THE AIR FROM THE SUSPENSION SYSTEM TO HELP PROVIDE STABILITY ON UNEVEN TERRAIN. FAILURE TO DO SO COULD RESULT IN LOSS OF VEHICLE CONTROL, POSSIBLY CAUSING PERSONAL INJURY OR PROPERTY DAMAGE.

WARNING

PERSONAL PROTECTIVE EQUIPMENT

ALWAYS WEAR PROPER EYE PROTECTION AND OTHER REQUIRED PERSONAL PROTECTIVE EQUIPMENT TO HELP PREVENT PERSONAL INJURY WHEN PERFORMING VEHICLE MAINTENANCE, REPAIR OR SERVICE.

CAUTION

PROCEDURES AND TOOLS

A TECHNICIAN USING A SERVICE PROCEDURE OR TOOL WHICH HAS NOT BEEN RECOMMENDED BY HENDRICKSON MUST FIRST SATISFY HIMSELF THAT NEITHER HIS SAFETY, OR THE VEHICLE'S SAFETY, WILL BE JEOPARDISED BY THE METHOD OR TOOL SELECTED. INDIVIDUALS DEVIATING IN ANY MANNER FROM THE INSTRUCTIONS PROVIDED WILL ASSUME ALL RISKS OF CONSEQUENTIAL PERSONAL INJURY OR DAMAGE TO EQUIPMENT INVOLVED.

WARNING

PARTS CLEANING

SOLVENT CLEANERS CAN BE FLAMMABLE, POISONOUS AND CAUSE BURNS. TO HELP AVOID SERIOUS PERSONAL INJURY, CAREFULLY FOLLOW THE MANUFACTURER'S PRODUCT INSTRUCTIONS AND GUIDELINES AND THE FOLLOWING PROCEDURES:

- WEAR PROPER EYE PROTECTION
- WEAR CLOTHING THAT PROTECTS YOUR SKIN
- WORK IN A WELL-VENTILATED AREA
- DO NOT USE PETROL OR SOLVENTS THAT CONTAIN PETROL, WHICH MAY CAUSE FIRE OR AN EXPLOSION.
- HOT SOLUTION TANKS OR ALKALINE SOLUTIONS MUST BE USED CORRECTLY. FOLLOW THE MANUFACTURER'S RECOMMENDED INSTRUCTIONS AND GUIDELINES CAREFULLY TO HELP PREVENT PERSONAL ACCIDENT OR INJURY.

DO NOT USE HOT SOLUTION TANKS OR WATER AND ALKALINE SOLUTIONS TO CLEAN GROUND OR POLISHED PARTS. DOING SO WILL CAUSE DAMAGE TO THE PARTS AND VOID WARRANTY.

SECTION 3: DESCRIPTION

The HAS series suspensions are ideal for operations with diminishing loads, such as tankers and grocery operations, and where ride quality both empty and loaded is important.

The HAS suspension ride height is controlled by a single height control valve. The valve has immediate air response with a 1.5° dead band and high air flow.

A pilot valve is able to be installed in the cab to enable quick release of the air at the rear suspension. This permits the driver to exhaust the rear suspension air for trailer coupling and uncoupling.

A pressure protection valve located at the vehicle's air storage tanks protects the vehicle's primary air system should a failure occur in the suspension's air system.

All HAS Series suspensions are intended for installation on overall frame widths of 862 to 868, 876 to 885; axle dowel pin centres of 1016 or 1022; and axle spacing of 1320, 1371, 1524 or 1841. (Note: All dimensions are nominal in millimetres).

Figure 1
HAS Tandem

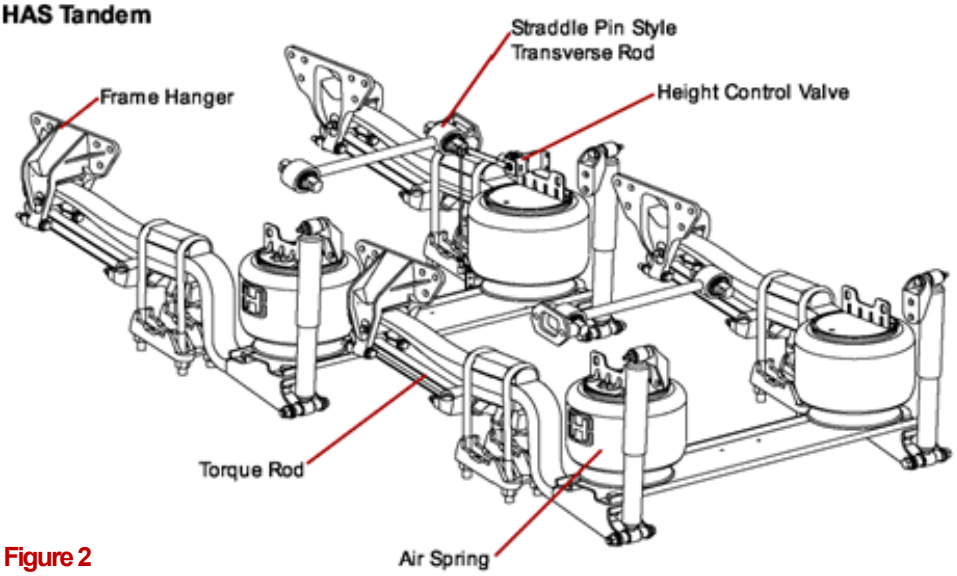

Figure 2
HAS Single Axle

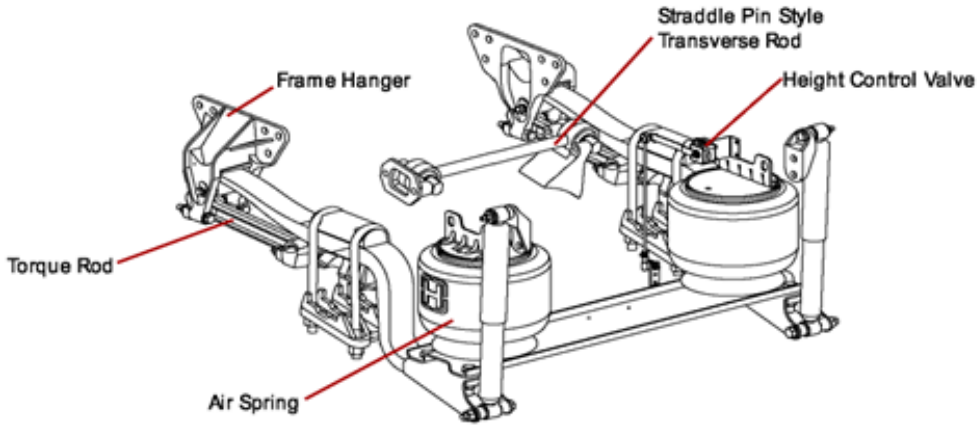

The design features include:

- constant ride height either empty or loaded;
- one-piece cast nodular iron frame hangers, axle seats, and axle caps;
- low frame height;
- torque rods with premium rubber bushes;
- no lubrication; and
- positive axle alignment through the use of drop-in shims.

NOTE: Drive axle pinion angles are established by the vehicle manufacturer. The axle seats are cast to specific angles to meet their requirements. Empty chassis axle pinion angles will measure about one degree less as compared to when the vehicle is fully loaded. This is because the main support members will deflect slightly under full load.

Because the HAS suspension allows a high degree of axle articulation, applications with low ride height hardware and low fifth wheels may allow the drive tyres to interfere with the trailer floor during maximum articulation or when the quick release valve is actuated.

HAS SERIES TRUCK APPLICATION GUIDELINES

Tabled below is the HAS Single Axle Guidelines:

	HAS 120	HAS 200	HAS 230	HAS 231
Suspension Capacity	5,000 kg	9,000 kg	10,000 kg	10,000 kg
GCM (Tractor)	16,000 kg	36,000 kg	40,000 kg	45,000 kg
Service On/Off Highway	On	On	On/Off *	On /Off *
Suspension Weight	158 kg	200 kg	210 kg	218 kg
Engine Torque	542 Nm (400 lb ft)	1831 Nm (1,350 lb. Ft)	1966 Nm (1,450 lb. Ft.)	2102 Nm (1,550 lb ft)
Applications	Flat Top Van	Rigid Single Trailer	Rigid Single Trailer On Highway B Double	Rigid Single Trailer On Highway B Double
Notes: * Greater than 10 % off-highway use requires Application Approval e.g. Tipper, Agitator				

HAS SERIES TRUCK APPLICATION GUIDELINES

Tabled below is the HAS Tandem Axle Guidelines:

	HAS 400	HAS 460	HAS 461
Suspension Capacity	18,000 kg	18,000 kg	18,000 kg
GCM (Tractor)	68,000 kg	81,000 kg	90,500 kg
Service On/Off Highway	On	On/Off *	On /Off *
Suspension Weight	400 kg	418 kg	435 kg
Engine Torque	2237 Nm (1,650 lb. ft)	2237 Nm (1,650 lb. Ft**)	2509 Nm (1,850 lb ft)
Applications	Rigid Single Trailer	Rigid Single Trailer On Highway B Double	Rigid Single Trailer On Highway B Double
Notes:* Greater than 10 % off-highway use requires Application Approval e.g. Tipper, Agitator **1,750 lb. ft. with high torque shock absorbers			

Section 4:
Fifth Wheel Mounting Angle Clearance

The frame hangers are designed to allow for fifth wheel mounting angle clearance. In some cases, the mounting angles may extend down over the frame hangers and may have to be cut out to provide proper clearance. This is shown in Figure 3.

Figure 3

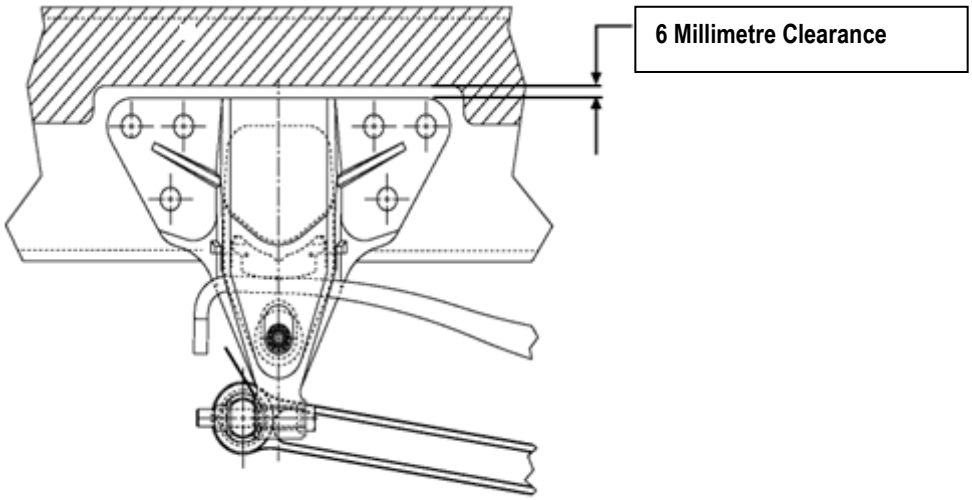

SECTION 5:
FRAME SLOPE

In most cases, the original vehicle manufacturer installs spring seats that are equal thickness on both the forward drive and the rear drive axles. These equal thickness spring seats are designed to have frames parallel to the ground which results in zero degree frame slope. The intent is to maintain identical main support member heights on the forward drive axle and the rear drive axle as shown in Figure 4.

Maintaining these identical heights assures equal loading on both drive axles as well as correct axle pinion angles. If the chassis frame slope is in excess of one degree, it may cause unequal loading between the two drive axles which may be detrimental to vehicle ride. If this condition persists, contact the vehicle manufacturer for guidelines or proceed with the following recommendations:

Figure 4

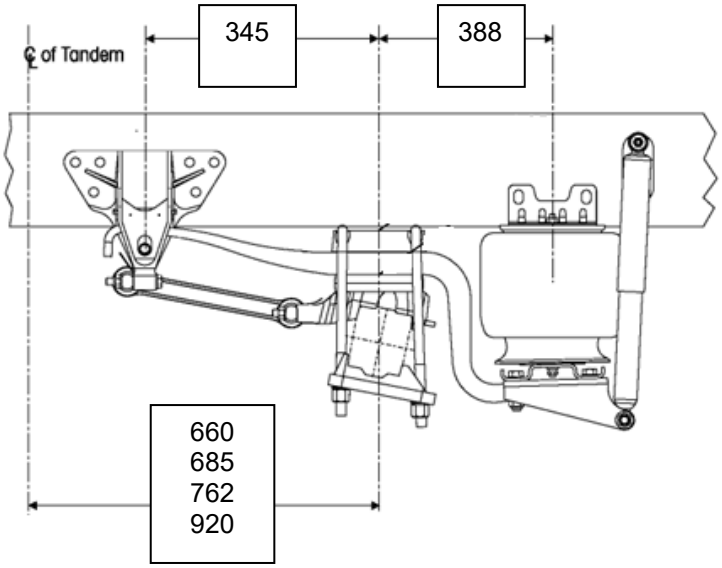

1. If the frame slopes downward and toward the cab the front drive axle will, in all probability, weigh more than the rear drive axle.

2. If the frame slopes upward towards the cab the rear drive axle will be the heavier of the two.

3. If the tandem suspension is too low, it could be corrected by adding spacer plates to all four corners of the tandem drive axles between the main support members and the spring seats. Do not attempt to correct frame slope by adding spacer plates on only one drive axle. The spacer plates can be made from ½ inch x 3 inch x 7 inch low carbon steel with a 13/16 inch diameter hole drilled in the centre for dowel clearance. A maximum of two 1/2 inch shop made spacer plates between each main support member and spring seat is permissible. Longer U-bolts will be required to accommodate spacer plates. Hendrickson has one inch and one and a half inch thick spacers available as production items. This is the maximum allowable spacer thickness.

4. If frame slope is excessive (greater than what can be corrected for with a 1 and 1/2 inch spacer) it should be corrected by the vehicle manufacturer.

5. If the tandem suspension is too high, the spacers can be removed (if so equipped), or the front steer axle suspension can be raised.

6. Do not make changes to the steering axle without prior approval and supervision of the OEM as the steering geometry could be affected thus, causing steering problems.

SECTION 6: SUSPENSION ALIGNMENT

1. Proper alignment is essential for maximum ride quality, performance, and tyre life. To achieve the proper alignment the following alignment procedure is recommended. The procedure should be performed if excessive or irregular tyre wear is observed.

   a. Use a work bay with a level surface.

   b. Relax the suspension by slowly moving the vehicle back and forth several times in a straight line without using the brakes. This will unwind any torque wind up in the driveline and suspension components. The vehicle should be at curb weight.

   c. DO NOT set the parking brake. Chock the front wheels of the vehicle.

   d. Verify and maintain the air system is at full operating pressure.

   e. Verify that the vehicle is at the correct ride height. Correct as necessary.

   f. Verify all suspension components are in good condition. Repair or replace any worn or damaged suspension components before proceeding with the alignment process.

   g. Ensure all drive axle tyres are the same size.

   h. If axle alignment equipment is not available, using ‘C’ clamps, securely clamp a 2,500 mm piece of STRAIGHT bar stock or angle iron across the lower frame flange as shown in figure 5. Select a location for the straight edge as far forward as possible of the drive axle where components will not interfere.

   i. Accurately square the straight edge to the frame using carpenter’s square.

   j. Using a measuring tape, measure from the straight edge to the forward face of the front axle arms at the centreline on both sides of the vehicle as shown in figure 5, **A** and **B.**

   k. Calculate the difference between measurements **A** and **B.**

      i. If the front drive axle is within vehicle manufacturer’s specifications, proceed to check the rear drive axle (Step l.)

      ii. If alignment of the front axle IS NOT within the vehicle manufacture’s specifications – (three mm), then the alignment of the axle MUST be corrected BEFORE measuring the rear drive axle (Step l). Correct the alignment by loosening the rebound locknut and then adjust the drive axle by loosening up torque rod bar-pin locknuts on the frame hanger and add drop-in alignment shims as shown in figure 5.

Note:	Since the remaining axle(s) will be aligned relative to the front drive axle, it is essential that the front drive axle is aligned within the vehicle manufacturer’s specifications prior to the alignment of the remaining axle(s)

   l. Using a trammel bar, measure the distance from the spindle centre of the front drive axle to the spindle centre of the rear drive axle on both sides of the vehicle. See figure 5. **C** and **D**.

m. Calculate the difference between measurements **C** and **D.**

i. If the measurements are within the vehicle manufactures specifications, then the rear drive axle alignment is acceptable. Proceed to check the pinion angles of the drive axles.

ii. If the alignment of the rear drive axle IS NOT within the vehicle manufactures specifications, then the alignment of this axle MUST be corrected BEFORE checking the drive pinion angles. Correct the alignment of this axle by following the procedure at Para 1, sub Para. (k) ii.

n. Repeat steps l and m for any remaining drive axles (s). Be sure all remaining drive axles are aligned relative to the front drive axle.

o. After all drive axles are aligned, check the pinion angle of each drive axle with a digital protractor. Refer to the vehicle manufactures specifications for the required pinion angles.

i. If all pinion angles are within vehicle manufacturers specifications, then proceed to step Para p.

ii. If any pinion angle is out of vehicle manufactures specifications it must be corrected.

p. Recheck measurements to confirm adjustments. Repeat step through k – o until the correct alignment and pinion angles are achieved.

q. When all drive axle alignments and pinion angles are within the vehicle manufactures specifications then the alignment procedure is complete.

Figure 5

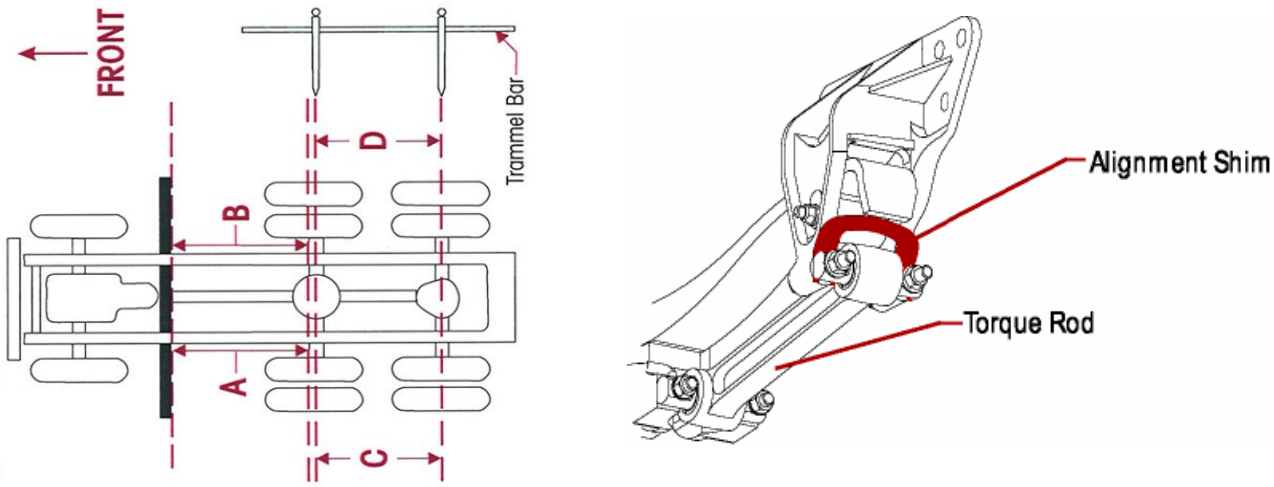

SECTION 7:
PREVENTATIVE MAINTENANCE

HAS FAMILY OF SUSPENSION PREVENTATIVE MAINTENANCE SCHEDULE

1. Tabled below is the recommended preventative maintenance schedule for the HAS Family of Suspension systems. Vehicles operating in an Off highway or Severe Duty application shall require more frequent service intervals than on-highway applications. The schedule is separated into the following systems areas:

   a. **Pre-Operation – Post Operation (Pre-Op – Post Op).** The purpose of this activity is for the driver to conduct a walk-around visual inspection of the vehicle to ensure that suspension components are secure and that there is no visible damage to suspension components.

   b. **1,500 Kilometre Service.** This service is conducted at the vehicle first service or, after completion of a significant maintenance activity, which requires replacement of main support members. U-bolts and other fasteners that have been replaced or disturbed at an earlier maintenance activity are required to be re-checked to ensure the correct torque is applied to the fasteners.

   c. **30,000 Kilometre – Annual Service.** This service is performed at 30,000 kilometres or at the 12 month interval – whichever occurs first. In severe duty conditions such as operating in off-road environment the service intervals may be increased to meet the operating conditions.

Note: All critical Torque Requirements are detailed in Section Ten

Operation	Schedule			Performed By	
	Pre-Op Post–Op	1,500 Km First Svc	30,000 Km Annual	Driver	Maintainer
Pre and Post Vehicle Operation Visual Inspection: 1. Main Support Member U-bolts 2. Frame Hanger Mount Bolts 3. Transverse Torque Rod Security 4. Air Spring and Air Line Security 5. Shock absorber security	X			X	
Visual Inspection: 1. Main Support Member U-bolts 2. Main Support wear washer and bolster block. 3. Frame Hanger Mount Bolts 4. Longitudinal and Transverse Torque Rod Security 5. Air Spring and Air Line Security 6. Shock absorber security 7. Check all chassis and suspension structural members for cracks/notches and/or impact damage		X	X		X
Service Pre-Requisites: 1. Review Vehicle Maintenance Record 2. Review Service Schedule 3. Clean Vehicle 4. Vehicle Supported on Safety Stands - Wheels Removed		X	X	X	X

Operation	Schedule			Performed By	
	Pre-Op Post–Op	1,500 Km First Svc	30,000 Km Annual	Driver	Maintainer
Tyre Wear Visually inspect tyres for any evidence of unusual wear patterns that may indicate suspension damage or misalignment.	X	X	X	X	X
Air Spring - Height Control Valve and Lines **Air Spring.** 1. Visually inspect the outer surface of the air springs for chafing, uneven wear, cracks or any signs of component damage. 2. Ensure that the upper bead plate is tight against the underside of the frame. 3. Inspect for lateral slippage at the lower air spring bracket (3 mm slippage in either direction is acceptable) 4. Inspect mounting hardware for security. **Height Control Valve (HCV)**. 1. Inspect security of HCV. 2. Ensure freedom of HCV Linkage 3. Inspect HCV Setting (refer HCV setting) **Pneumatic Lines** 1. Inspect security of all pneumatic Lines 2. Visually inspect for abrasive wear.		X	X		X
Main Support Member Assembly 1. Visually inspect main support member and connections for any cracks, indents, impact damage. Inspect for evidence of looseness, metal shavings. 2. Visually Inspect Main Beam Bottom Cap 3. Visually Inspect Top Pad Main Beam U-bolts 4. Visually Inspect MSM surface area (Max 10 mm Wear)		X	X		X
Torque Main Support Member Clamp Group 1. Torque Main Support Member - U-bolts 2. Torque Main Support Member to cross channel.		X	X		X
Frame Hanger 1. Visual Inspect Hanger for security looseness of fasteners, movement or damage. Inspect for fatigue cracks particularly surrounding mounting bolts. 2. Inspect rebound roller for wear and security. 3. Inspect wear pad for security and wear.		X	X		X
Torque Frame Hanger to Chassis Mount Bolts		X	X		X
Longitudinal and Transverse Torque Rod 1. Inspect torque rods and mounting plates for security. 2. Inspect bushes for tears, bulging rubber and that there are no signs of excessive bush wear.		X	X		X
Longitudinal Torque Rod - Transverse Torque Rod. 1. Torque Longitudinal to Hanger Mount Bolts 2. Torque Transverse Torque Rod to Differential Mount Bolt 3. Torque Transverse Torque Rod to Chassis Mount Bolts.		X	X		X

Operation	Schedule			Performed By	
	Pre-Op Post–Op	1,500 Km First Svc	30,000 Km Annual	Driver	Maintainer
Shock Absorbers 1. Visually inspect shock absorber bushes for tears, bulging rubber and that there are no signs of excessive bush wear. 2. Visually inspect shock absorbers for any dents or fatigue cracks around upper and lower mounting eye. 3. Inspect shock absorber for any signs of dents or leakage. Note: Misting of shock absorber is acceptable refer to shock absorber inspection.		X	X		X
Torque Shock Absorber Mount Bolts 1. Torque upper shock absorber mount bolt. 2. Torque lower shock absorber mount bolt.		X	X		X
Road Test Vehicle - Document Service Information Road test vehicle for a minimum distance of 10 km to observe general suspension performance. 1. Look for any indication of unusual noise or vibration. 2. Measure shock absorber temperature with a heat gun.		X	X		X

MAIN SUPPORT MEMBERS

The operation of the HAS suspension will result in some wear between the main support member and the frame hanger slipper pad. In normal use these components will function satisfactorily through the life of the vehicle even though the components may show some wear. However, premature wear can occur and will require the replacement of one or both pads. A main support member should be replaced if it exhibits ten millimetres or more wear at the frame hanger cam surface contact area.

U-BOLT LOCKNUTS

Retighten the U-bolts to specified torque depending after first 1600 kilometres of service on new vehicle or vehicle with serviced axle attachment assembly, and then at regular intervals as experience dictates, not to exceed 32,000-kilometre intervals. Do not exceed specified torque on U-bolt locknuts.

IMPORTANT: Required torque depends on U-bolt specification. Refer to
Section 10:
HAS Suspension Critical Torque Specification Chart

Figure 6

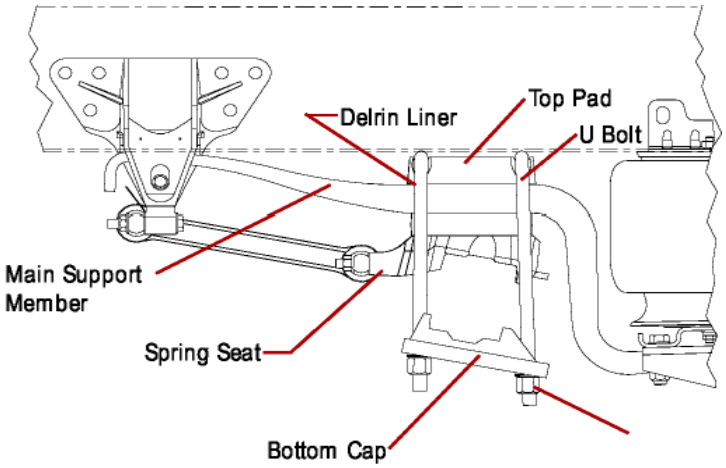

RIDE HEIGHT CONTROL VALVE SETTING

Adjustment of the ride height control valve linkage can be achieved by loosening the threaded extension arm fasteners and turning the ends, or by loosening the extension arm (link rod) locknut and repositioning the arm within the elongated hole in the arm as shown in Figure 7. Ride height is measured from the centre of the axle to the underside of the frame as depicted at Figure 8. Refer to Section 10 for more torque values.

Figure 7

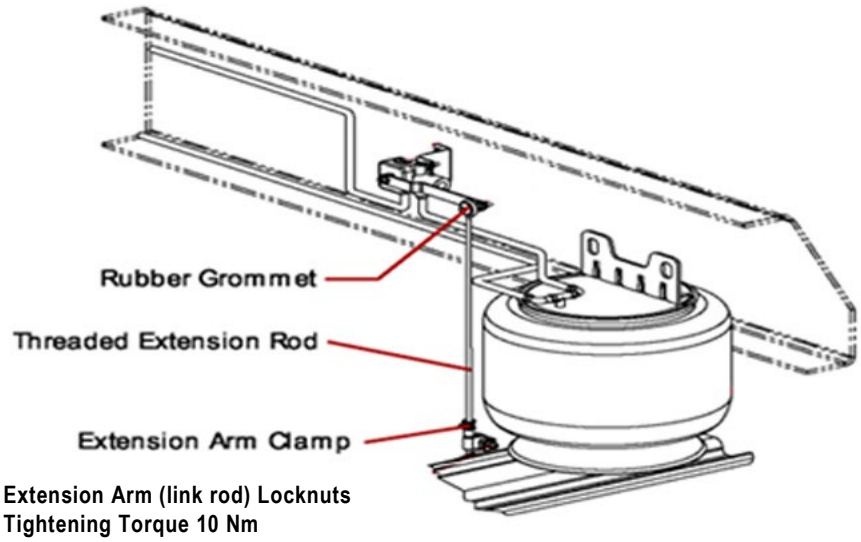

Figure 8

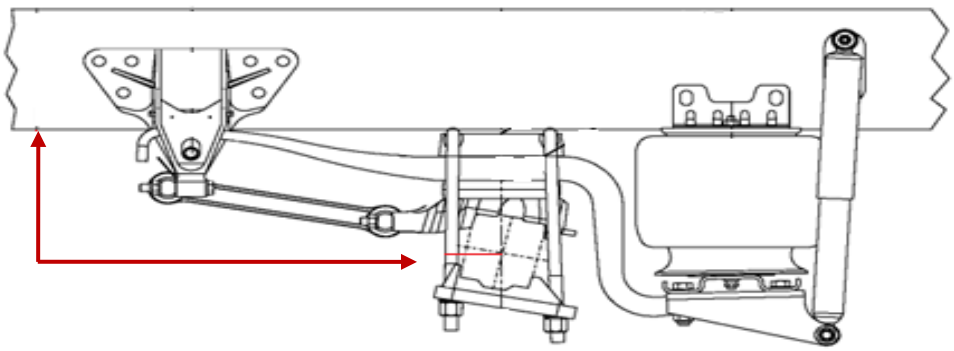

NOTE:	During cycle operation of the height control valve, it is normal to experience a limited amount of exhaust noise.

FRAME HANGER SLIPPER PADS

The operation of the HAS suspension will result in some wear between the main support member and the frame hanger slipper pads, see Figure 9. In normal use the slipper pads will function satisfactorily even though they may show some wear. If the slipper pads require replacement, identify which frame hanger you have and how they are attached and follow instructions in the component replacement section of this publication. Excessive wear of the wear pad shall affect pinion angle setting which can lead to driveline vibration.

Figure 9

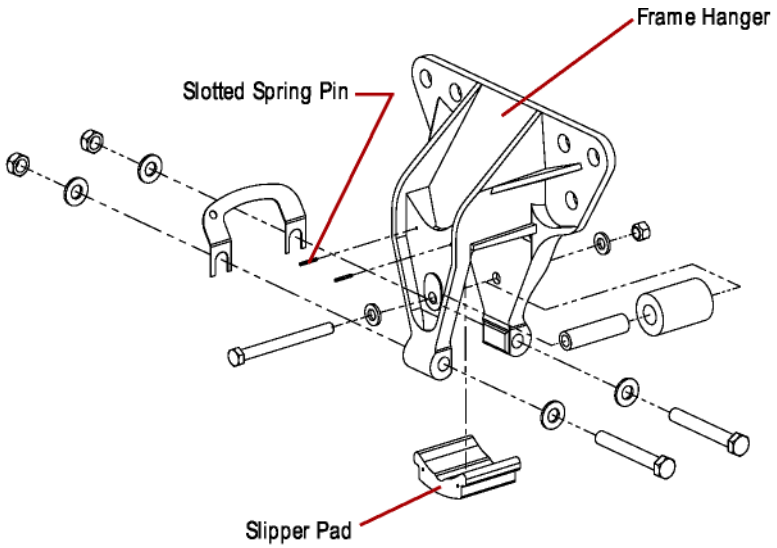

SECTION 8:
COMPONENT REPLACEMENT

MAIN SUPPORT MEMBERS

NOTE: ALL CRITICAL TORQUE REQUIRMENTS ARE TABLED AT SECTION TEN.

The following procedure is recommended to replace main support members. Main support members on an axle group must be replaced in pairs to prevent chassis lean.

Note: A maximum of 10 millimetres of wear is allowed on the MSM contact area to the slipper pad.

Disassembly:

1. Chock wheels of axle.
2. Support axle with jack stand.
3. Dump air pressure from air springs.
4. Remove height control valve link from valve by removing nut and lock washer.
5. Remove rebound bolt, locknut, washers, spacer tube, and rebound roller from frame hanger.
6. Raise rear of frame far enough to remove load from main support member.
7. Remove U-bolt locknuts and washers.
8. Remove U-bolts, bottom cap, and top pad.
9. Remove both locknuts and washers which connect the cross channel to both main support members.
10. Lift cross channel off the main support member with jacks.
11. Remove main support member assembly.

Assembly:

1. Position main support member on axle seat, or on spacer plate if so equipped, with main support member centre dowel pin piloting into hole in axle seat or spacer plate. Delrin liner must be positioned on the top side of the main support member.
2. Assemble top pad, U-bolts, bottom cap, washers, and locknuts as shown in Figure 10. The torque rod mounting bolts of the spring seats must be positioned toward the front of the vehicle. Do not tighten U-bolt locknuts at this time.

Figure 10

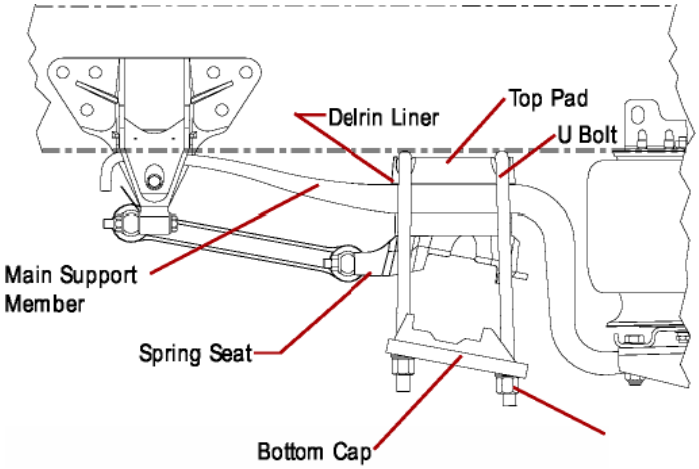

3. Lower the air spring and cross channel mounting bolts into main support members.

4. Assemble washers and locknuts which connect the cross channel to the main support members. Torque the locknuts as shown at figure 11.

Figure 11.

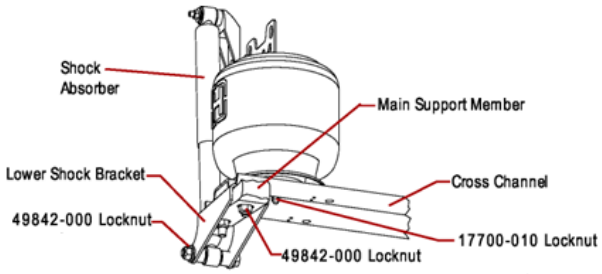

5. Lower frame so that frame hangers engage main support member. Air up the system and centre the tip of the main support member between the frame hanger legs.

6. Evenly tighten U-bolt locknuts to the correct torque. Rap top of U-bolts and retighten to the correct torque.

DO NOT EXCEED SPECIFIED TORQUE ON U-BOLT LOCKNUTS.

7. Assemble rebound bolt, spacer, roller, washers and locknut in frame hangers as shown in Figure 12. Tighten locknut to the correct torque.

8. Assemble height control valve link. Torque locknut.

9. Recheck alignment after the new main support members are installed.

NOTE: U-bolt locknuts must be retightened to the correct specification at the first 1,600-kilometre service and at regular intervals thereafter as experience dictates not to exceed 32,000 kilometres.

Do not exceed specified torque on U-bolt locknuts.
U-bolts are to be coated with SAE 20 OIL

Figure 12

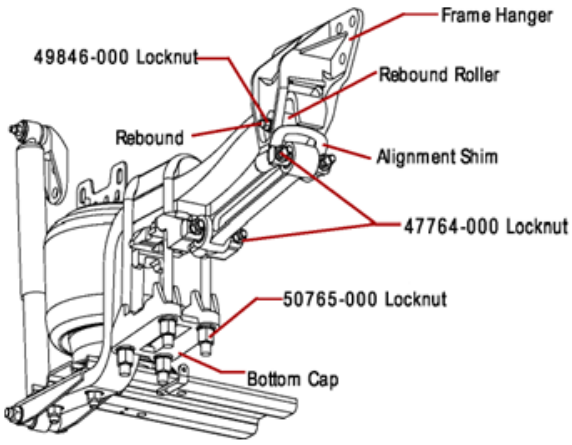

SPRING SEATS

The following instructions apply if the spring seat or the mounting stud for torque rod attachment requires replacement.

1. Follow earlier instructions to block and support the vehicle. Remove the U-bolts and main support member and remove the spring seat.

2. If a new spring seat is required, the seat angle as shown in Figure 13, must be specified when ordering.

Figure 13

Bottom View of Spring

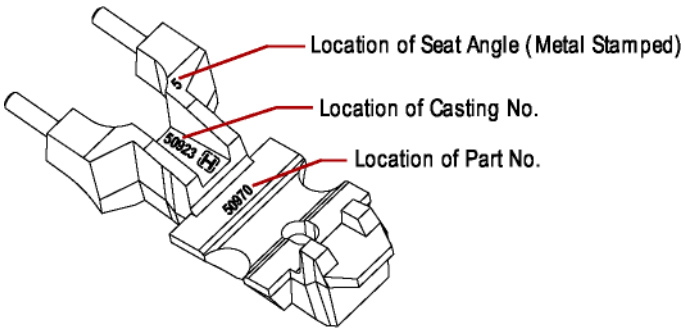

3. If only the stud requires replacement, it can be removed with a stud puller.

4. The new stud can then be installed with a stud driver. To assure proper assembly the stud should be inserted from the dog point end (tap end) first and bottom out in the threaded hole of the spring seat.

5. Replace the spring seat, main support member and U-bolts as described earlier.

6. Assemble the torque rod straddle mount bush to the spring seat and tighten the 5/8 inch locknuts to the correct torque.

7. Recheck all fasteners for proper torque prior to moving the vehicle.

TORQUE ROD BUSH REPLACEMENT

Torque rods are fixed length and use drop-in shims as shown in Figure 14 for suspension alignment adjustment. The following procedure is recommended to replace the torque rod bushes.

Disassembly:

1. Chock wheels of drive axles.

2. Remove straddle mount bar pin locknuts and washers at axle end of torque rod.

3. Loosen rebound bolt locknut in the frame hanger.

4. Remove straddle mount bar pin locknuts, bolts, and washers, and any alignment shims at frame hanger end of torque rod. Note the number of shims as they must be reinstalled in the same manner to avoid affecting alignment.

Figure 14

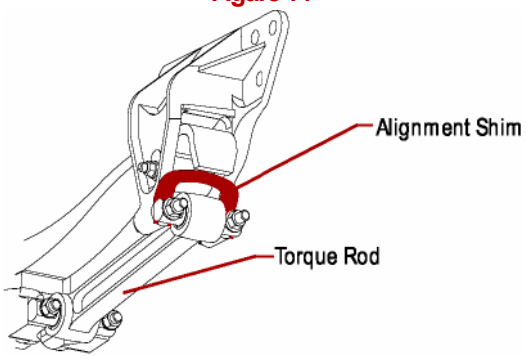

5. Push out old bushes. Use a vertical shop press with a capacity of at least 10 tonne capacity. A 127 mm long piece of 50.80 mm internal dimension by 6 mm wall steel tubing receiving tool is required. These bushes are not cartridge type bushes. They do not have outer metals. Support torque rod end on receiving tool with end tube of torque rod centred on tool. Push directly on bush straddle mount bar pin until bush clears torque rod end tube.

CAUTION BE SURE THE TORQUE ROD IS SQUARELY SUPPORTED ON THE PRESS BED FOR SAFETY.

WARNING DO NOT USE HEAT OR A CUTTING TORCH TO REMOVE THE BUSHES FROM THE TORQUE ROD. THE USE OF HEAT WILL ADVERSELY AFFECT THE STRENGTH OF THE TORQUE ROD.

6. Clean and inspect I.D. of torque rod ends, removing any nicks with emery cloth.

7. Lubricate I.D. of torque rod ends and new rubber bushes with a vegetable base oil (cooking oil or lard). **DO NOT** use petroleum or soap base lubricant.

8. Press in new bushes. Support torque rod end on receiving tool with end tube of torque rod centred on receiving tool. The straddle mount bar pin bushes must have mounting flats positioned zero degrees to shank of torque rod as shown in Figure 15. Press directly on straddle mount bar pin of bush. Bushes must be centred within torque rod end tubes. When pressing in new bushes, overshoot desired final position by approximately 5 mm and press bush again from opposite side to centre bush within torque rod end.

Figure 15

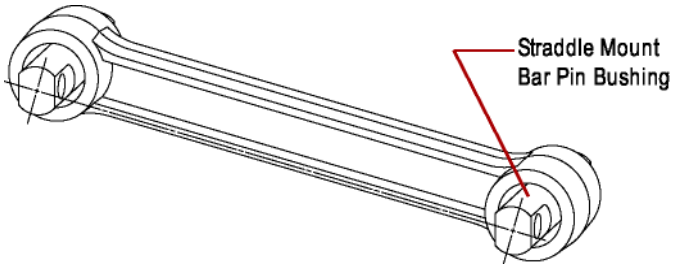

CAUTION BE SURE THE TORQUE ROD IS SQUARELY SUPPORTED ON THE PRESS BED FOR SAFETY.

Assembly:

1. Position the new or rebushed torque rod in spring seat and assemble washers and locknuts. Hand tighten locknuts.
2. Position torque rod on forward face of frame hanger legs and assemble bolts, washers, locknuts, and any alignment shims. Tighten locknuts to the correct torque.
3. Tighten locknuts at axle end of torque rod to the correct torque.
4. Tighten rebound bolt locknuts to the correct torque as shown at Figure 16.

Figure 16

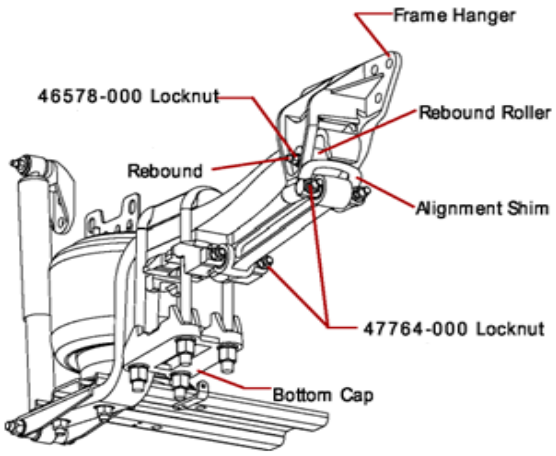

FRAME HANGER SLIPPER PAD

SPRING HANGER STYLE INTEGRAL SLIPPER PAD WITH ROLL PIN

The following procedure is recommended if your frame hanger slipper pad attachment is the design as shown in Figure 17.

Figure 17

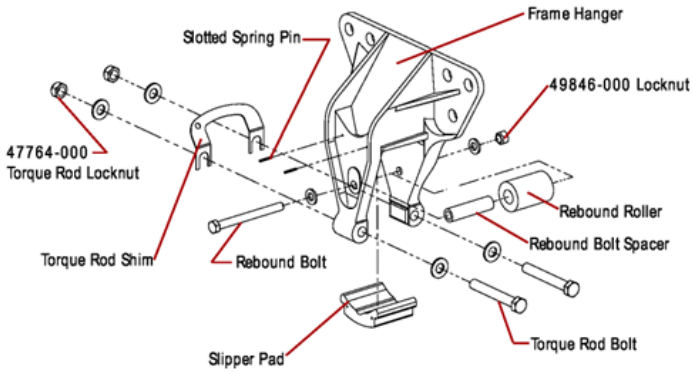

Disassembly:

1. Support the frame with frame stands.
2. Release all air from the air springs.
3. In most cases removal of the rebound roller and spacer may be required to disassemble the slipper pad. Remove the rebound bolt locknut, washer, bolt rebound roller and spacer.
4. Apply an upward force on the cross channel below the main support member with a jack or pry bar. This will cause the tips of the main support members to drop away from the slipper pad. **Do not nick or gouge the cross channel.**
5. With a blunt end 3 mm punch; drive in current roll-pin, until it has passed through the foot of the hanger. Remove slipper pad with a screwdriver.

Assembly:

1. Insert new slipper pad.
2. Raise main support member to secure slipper pad in place.
3. Drive new roll-pin in place with punch until flush with front of frame hanger.
4. Tighten fasteners as shown in Figure 17.
5. Remove jack and air up system.

SPRING HANGER STYLE: INTEGRAL SLIPPER PAD WITH CLAMP

The following procedure is recommended if your frame hanger slipper pad attachment is the hex head fastener design as shown in Figure 18.

Figure 18

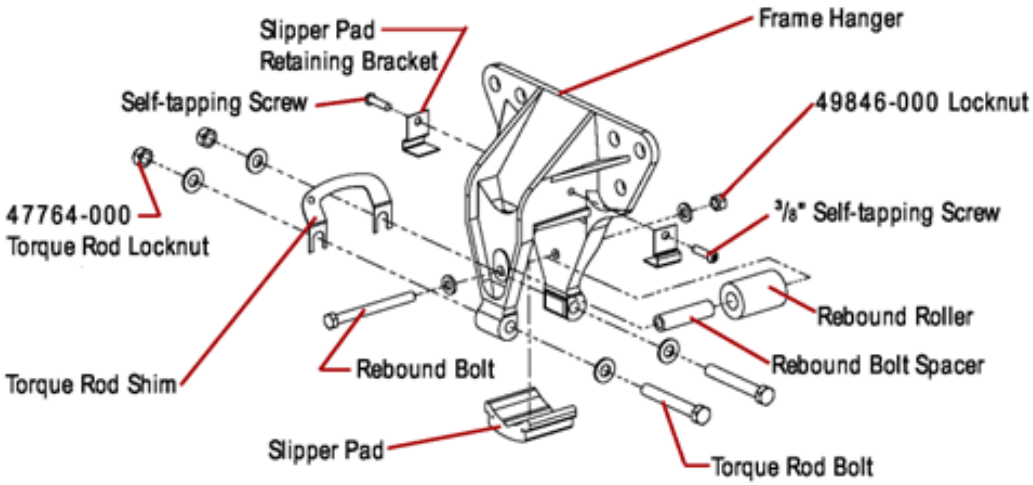

Disassembly:

1. Support the frame with frame stands.

2. Release all air from the air springs.

3. In most cases removal of the rebound roller and spacer may be required to disassemble the slipper pad. Remove the rebound bolt locknut, washer, bolt rebound roller and spacer.

4. Apply an upward force on the cross channel below the main support member with a jack or pry bar. This will cause the tips of the main support members to drop away from the slipper pad. **Do not nick or gouge the cross channel.**

5. Remove fasteners, 3/8 inch hex head self-tapping screws. Remove the slipper pad. In some cases, the screws may require to be drilled through using 8 mm drill size.

Assembly:

1. Position the slipper pad and retainer plate on frame hanger; tighten the hex head self-tapping screws to 35 Nm

2. Remove jack and air up system.

SPRING HANGER STYLE WRAP AROUND SLIPPER PAD

The following procedure is recommended if your frame hanger slipper pad attachment is the design as shown in Figure 19.

Figure 19

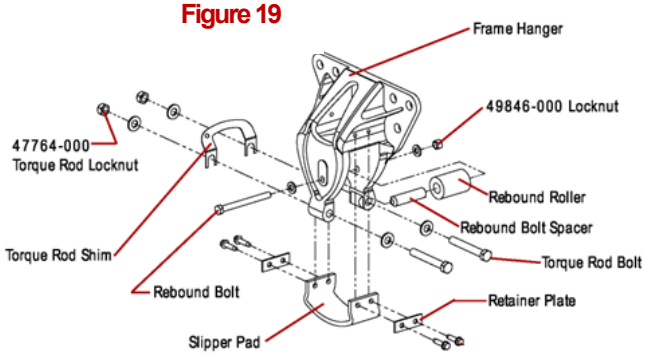

Disassembly:

1. Support the frame with frame stands.

2. Release all air from the air springs.

3. In most cases removal of the rebound roller and spacer may be required to disassemble the slipper pad. Remove the rebound bolt locknut, washer, bolt rebound roller and spacer.

4. Apply an upward force on the cross channel below the main support member with a jack or pry bar. This will cause the tips of the main support members to drop away from the slipper pad. **Do not nick or gouge the cross channel.**

5. Remove fasteners, (4) 3/8 inch hex head self-tapping screws. Remove the slipper pad. In some cases, the screws may require to be drilled through using 8 mm drill size.

Assembly:

1. Position the slipper pad and retainer plate on frame hanger, tighten the hex head self-tapping screws to 35 Nm torque.

2. Remove jack and air up system.

FRAME HANGERS

The operation of the HAS suspension will result in some wear between the main support member and the frame hanger if the slipper pad has worn through. In normal use these components will function satisfactorily through the life of the vehicle even though the components may show some wear.

However, premature wear can occur and will require the replacement of one or both pads. A frame hanger should be replaced if a leg has been grooved by the main support member in excess of 3 mm or if the cam is worn through.

If the frame hangers require replacement, attachment to the frame should follow the specifications for the correct frame hanger as shown in Figures 17, 18 and 19. However, first dump air pressure from the air springs. Follow the vehicle manufacturer's specifications for hanger to frame fastener tightening torque values.

CROSS CHANNEL

The following procedure is recommended to replace a cross channel:

Disassembly

1. Chock the wheels of the axle.
2. Remove height control valve link from valve by removing nut and lock washer.
3. Dump air pressure from air springs. Raise frame of vehicle to remove load from suspension.
4. Support frame with jack stands.
5. Remove the locknuts and washers which connect the air spring to cross channel and to both main support members.
6. Raise the cross channel by using jacks if required.

Assembly:

1. Assemble the cross channel to both air springs then lower the frame, piloting the bolt holes onto the main support member.
2. Assemble washers and locknuts which connect the cross channel to the main support member. Torque the locknuts to the correct torque.
3. Air up system.

Figure 20.

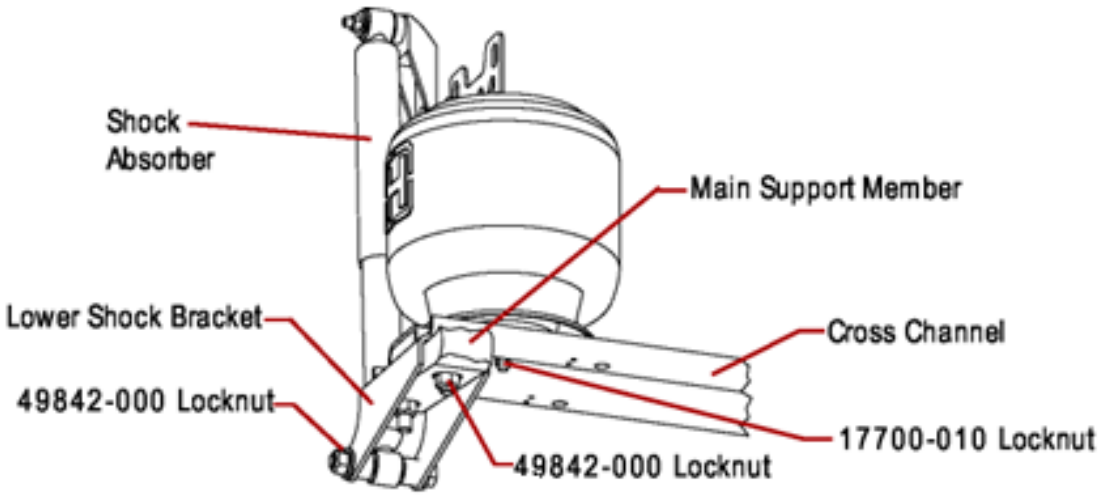

AIR SPRING

The following procedure is recommended for replacement of an air spring:

Disassembly:

1. Chock the wheels of the axle.
2. Dump air pressure from air springs.
3. Raise frame of vehicle to remove load from suspension.
4. Support frame with jack stands.
5. Remove locknuts and washers which connect air spring to the cross channel.
6. Remove air line to air spring.
7. Remove brass air fittings from air spring.
8. Remove locknuts and washers which connect air spring to the upper air spring frame hanger.
9. Remove air spring.

Assembly:

1. Assemble air spring to air spring frame hanger by inserting studs into appropriate holes.
2. Assemble air spring to cross channel by inserting studs into the holes.
3. Assemble washers and locknuts which connect air spring to the cross channel and tighten the locknuts to the correct torque.
4. Assemble washers and locknuts which connect air spring to air spring frame hanger. Tighten the outboard locknut to the correct torque.
5. Assemble brass air fitting to the air spring using Teflon thread sealing compound. (DO NOT USE TEFLON TAPE).
6. Assemble air lines to air springs.
7. Lower frame of vehicle.
8. Air up system.

Figure 21

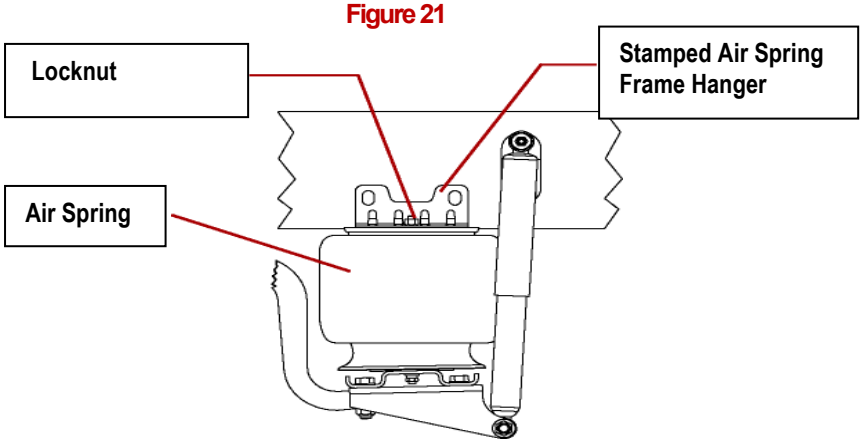

Figure 22

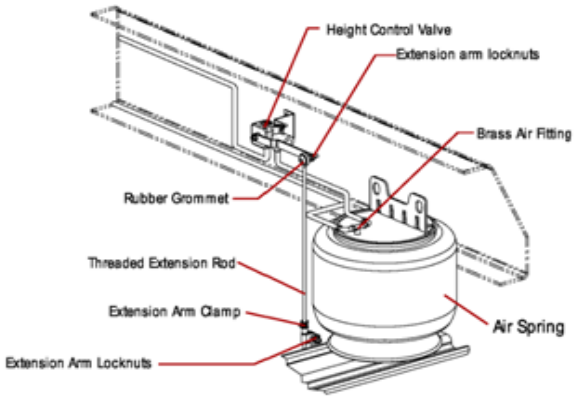

STAMPED AIR SPRING FRAME HANGER

Disassembly:

1. Dump air pressure from air springs.
2. Raise frame of vehicle to remove load from suspension.
3. Remove air lines to air spring.
4. Remove brass air fitting from air spring.
5. Remove locknuts and washers which connect the air spring bracket to the frame side rail.
6. Remove locknuts, washers and bolts which connect the air spring to the air spring to the air spring frame hanger.
7. Remove air spring frame hanger.

Assembly:

1. Assemble air spring frame hanger to top of air spring.
2. Assemble bolts, washers and locknuts which connect the air spring frame hanger to the frame. Follow the vehicle manufacturer's specifications for fasteners tightening torque value.
3. Assemble washers and locknuts which connect air spring to air spring frame hanger. Tighten outboard locknuts as shown in Figure 21.
4. Assemble brass air fitting to air spring using Teflon thread seal as shown in Figure 22.
5. Assemble air lines to air spring.
6. Air up system.

SHOCK ABSORBER OUTBOARD FRAME HANGER BRACKET

The following procedure is recommended for replacement of a shock absorber out board frame hanger bracket.

Disassembly:

1. Remove locknuts and washer at both ends of the shock absorber.
2. Remove shock absorber completely from chassis.
3. Remove the locknuts and washers which connect the shock absorber bracket to the frame.
4. Remove the shock absorber bracket.

Assembly:

1. Assemble shock absorber bracket to frame.
2. Assemble washers and locknuts which connect shock absorber bracket to the frame. Follow the vehicle manufacturer's specifications for fasteners tightening torque values.
3. Install washers at both ends of the shock absorber. Note that washers are required at both sides of each shock bush, which are four (4) washers per shock absorber.
4. Assemble both locknuts and tighten as shown in Figure 23.

Figure 23

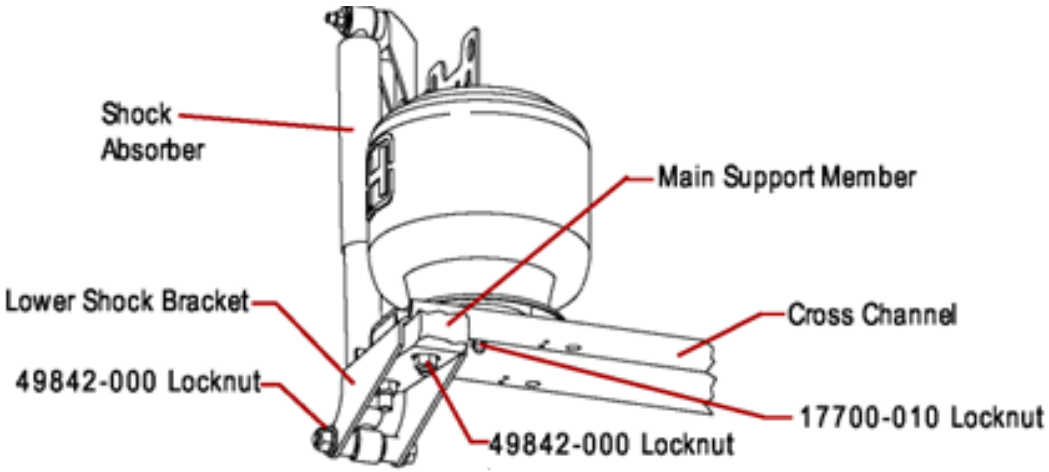

SHOCK ABSORBER OUTBOARD LOWER BRACKET

The following procedure is recommended for replacement of a shock absorber outboard lower bracket.

Disassembly:

1. Dump air pressure from air springs.
2. Raise frame of vehicle to remove load from suspension.
3. Remove shock absorber.
4. Remove locknuts, washers and bolts which connect the cross channel to the main support member.
5. Remove shock absorber outboard lower bracket by sliding bracket to rear.

Assembly:

1. Assemble bracket in between the cross channel and the main support member.
2. Assemble the bolts, washers and locknuts which connect the cross channels to the main support members. Tighten the locknuts in Figure 24.
3. Reassemble shock absorbers. Washers must be installed at both sides of each shock bush, which are four (4) washers per shock.
4. Assemble bolts, washers and locknuts. Tighten the locknuts as shown in Figure 24.

Figure 24

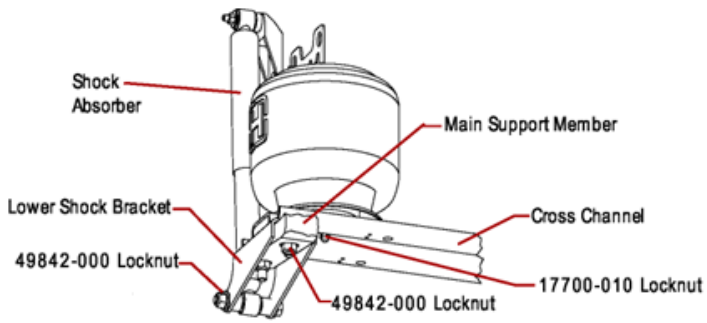

TRANSVERSE ROD

The following procedure is recommended for replacement of a transverse rod with tapered stud at axle connection and straddle mount at frame connection as shown in Figure 25 (some transverse rod installations may have straddle mount design at both frame and axle connection):

Figure 25
Straddle Pin Style
Transverse Rod

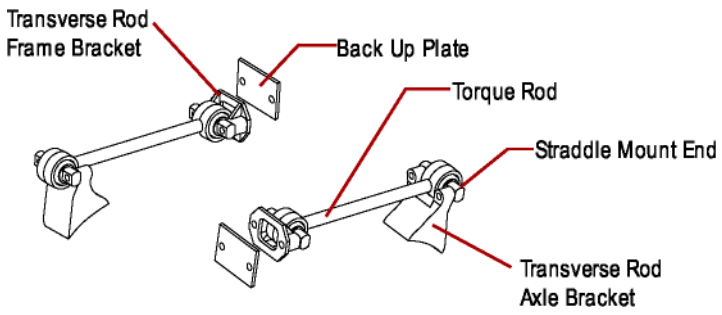

Disassembly:

1. Remove locknuts and washers which connect transverse rod to frame (if double straddle design, remove axle fasteners also and go to step 4).
2. Remove locknut and washer which connects tapered stud to axle bracket.
3. Remove tapered stud from axle bracket by hitting only the axle bracket with a hammer.

Assembly:

1. The tapered hole in the axle bracket must be free of all foreign matter.
2. Assemble tapered stud in the bracket.
3. Assemble washer and locknut to the stud. Tighten locknut to the correct torque.
4. After tightening, hit only the axle bracket with a hammer to seat tapered stud as shown in Figure 25.
5. Retighten locknut to the correct torque.
6. Position straddle mount end of torque rod at transverse rod frame bracket.
7. Assemble washer and locknuts which connect transverse rod to frame. Tighten the locknuts to truck manufacturer's specification (if double straddle design repeat for axle bracket connection).

SHOCK ABSORBER – STANDARD

Standard equipment shock absorbers are a 35 mm diameter bore with 466 mm compressed length and 762 mm extended length. The following procedure is recommended for replacement of a shock absorber.

Disassembly:

1. Remove locknut and washer which connects shock absorber to shock absorber outboard frame hanger bracket.
2. Remove locknut, washer and bolt which connect shock absorber to lower shock absorber bracket.
3. Remove shock absorber.

Assembly:

1. Assemble shock absorber. Assemble bolts, washers and locknuts which connect shock absorber to brackets. Washers must be installed at both sides of each shock absorber bush, which are four (4) washers per shock. Tighten the locknuts to the correct torque as shown in Figure 26.

Figure 26

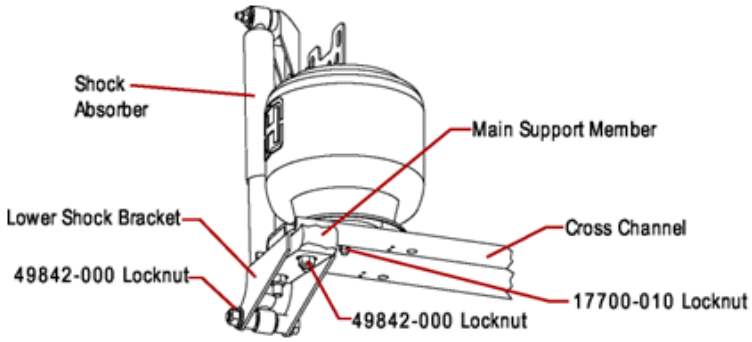

SHOCK ABSORBER – HI-TORQUE™

Significant force is required to overcome the internal rebound control spring to fully extend HI-TORQUE™ shock absorbers. Because they cannot be extended by hand, installation of these shocks is not recommended at ride height.

The air must first be exhausted from the suspension before to installing or removing the shock absorber. With the suspension deflated, the shock absorbers can be installed in a compressed state, minimising the effort of the installer.

1. Dump air from suspension.
2. Remove old shock absorber.
3. Apply some hand force to compress the internal rebound spring and install new shock
4. absorber but do not fully tighten hardware yet.
5. Raise suspension to correct ride height, which will extend the shock absorber.
6. Torque shock absorber hardware top and bottom to **80 Nm**.

HEIGHT CONTROL VALVE AND LINKAGE ARM ASSEMBLY

Disassembly for **NEW** height control valve as shown in Figure 27 and 28.

Figure 27

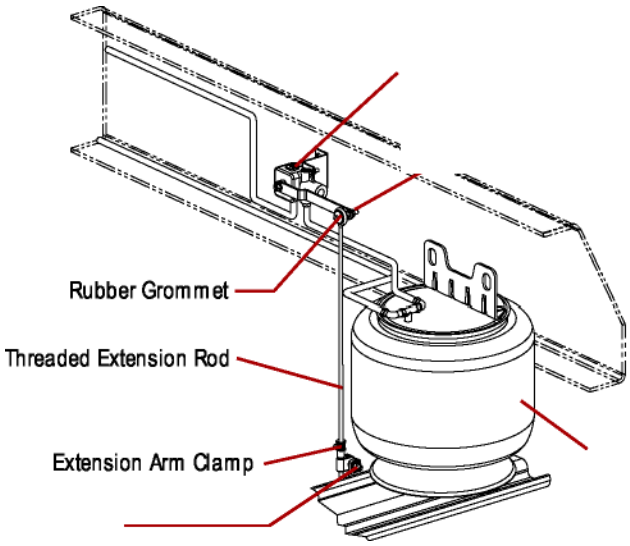

Figure 28

New Height Control Valve

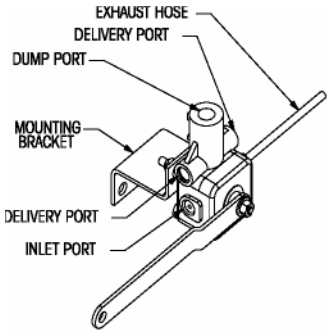

1. Place the vehicle on level floor.

2. Free and centre all suspension joints by slowly moving the vehicle back and forth without applying the brakes. When coming to a complete stop make sure the parking brakes are released, not engaged. Chock front wheels to prevent vehicle from moving.

3, Verify that the front steer and rear drive tyres are set to normal operating pressure.

4. Remove the existing height control valve and linkage arm assembly by removing the upper and lower fasteners. See Figure 27.

5. Install Height Control Valve Arm Assembly and linkage arm assembly by removing the outside 5/16 inch locknut and washer from the upper and lower part of the assembly. The 5/16 inch free running nuts remain on the assembly. The assembly orientation is with the rubber grommet located at the top of assembly as shown in Figure 27.

Height Control Adjustment

Figure 29.

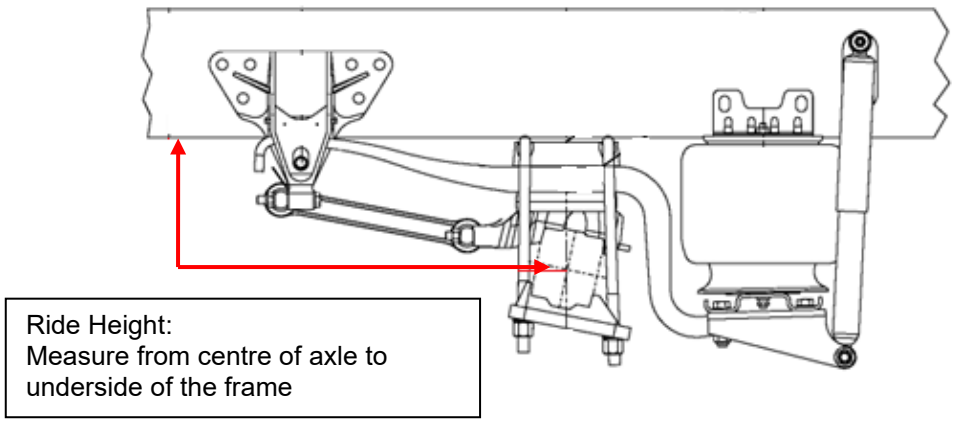

6. Verify that air system is at full operating pressure. Exhaust the air in the air springs enough to relax the suspension. Then refill the air springs. The ride height will now be positioned on the bottom end of the height control valve dead band. Set ride height to vehicle manufactures setting as shown at figure 29.

7. Adjust the extension rod to fit the upper valve arm joint into the Height Control Valve and the lower arm joint into the Control Valve Arm Bracket.

8. Insert the 5/16 inch washer and locknuts. Tighten locknuts by holding the free running nut with an open end wrench and securing the outside locknut. Torque locknuts to the correct torque.

9. Tighten clamp on the lower rubber valve arm joint with a screwdriver until securely fastened.

SECTION 9:
HAS AIR PLUMBING DIAGRAM

Figure 30 - Plumbing Diagram

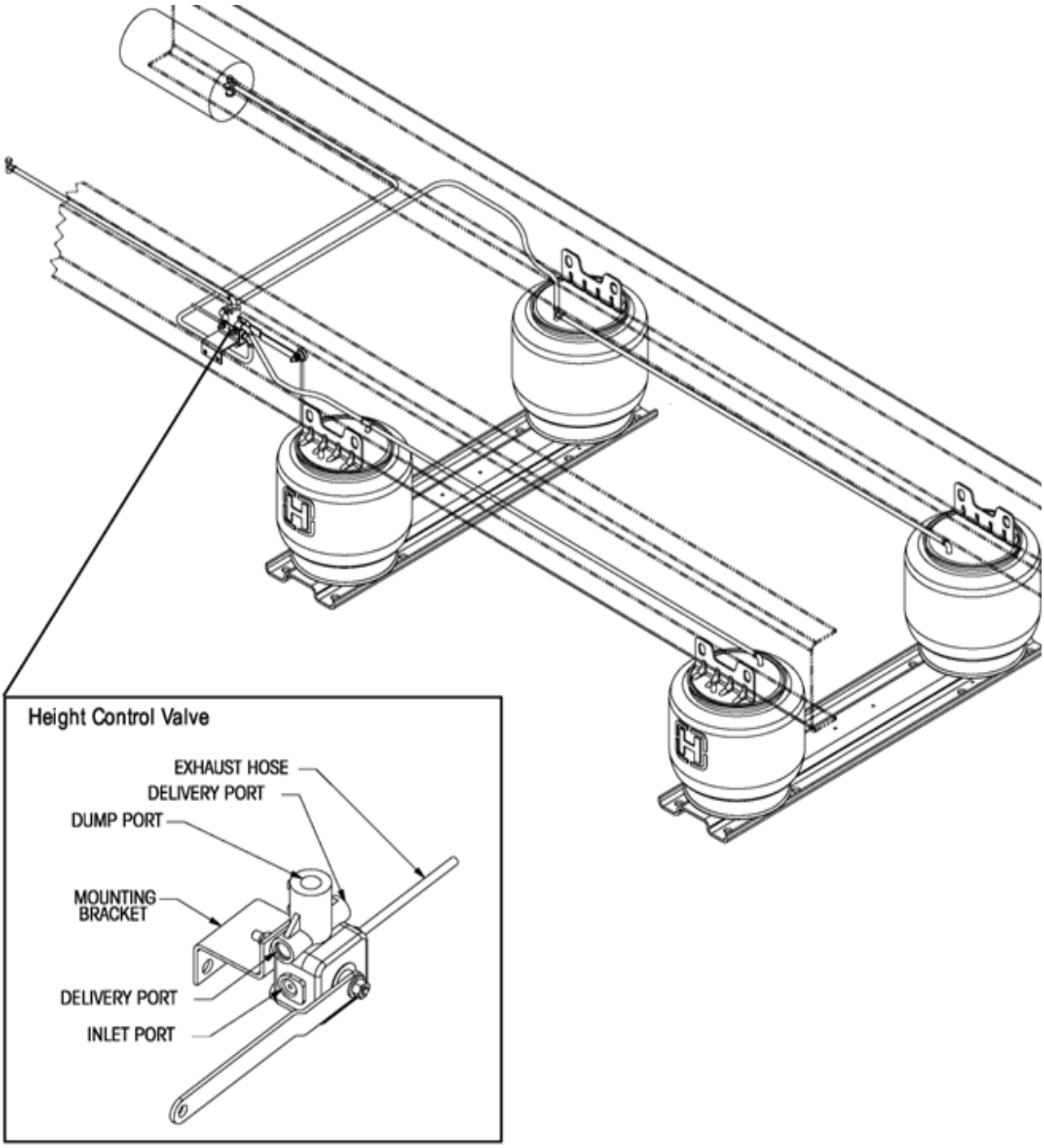

SECTION 10:
HAS SUSPENSION CRITICAL TORQUE SPECIFICATION CHART

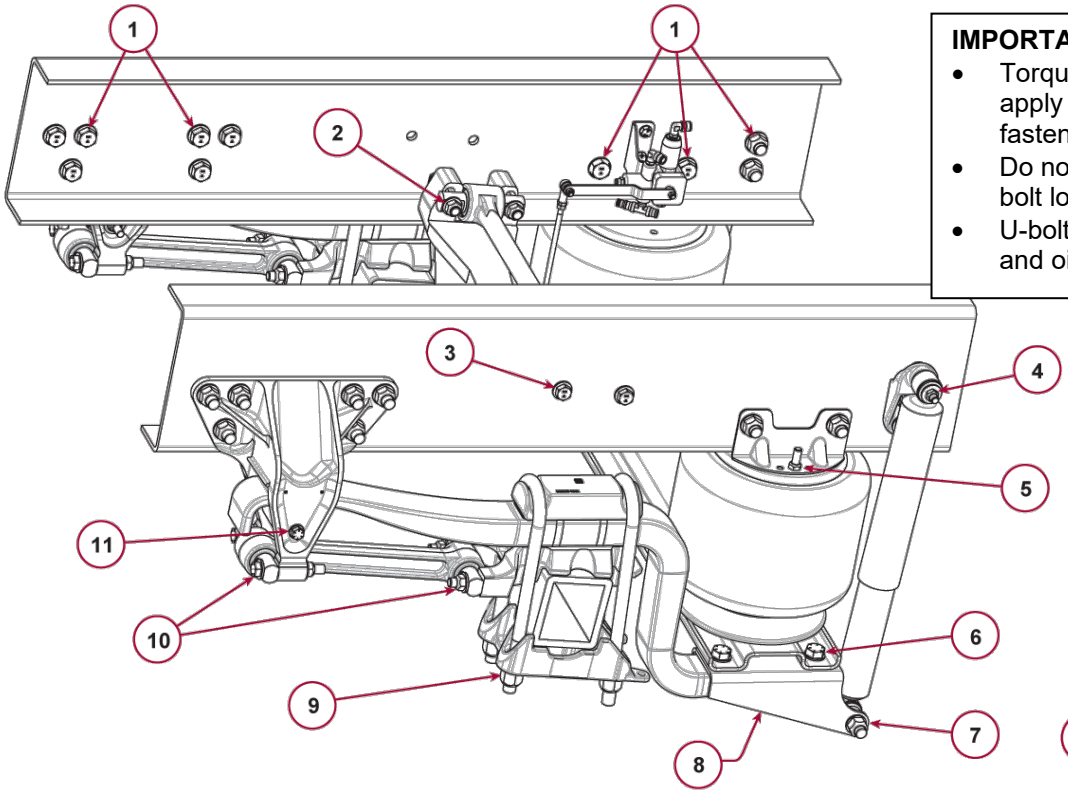

IMPORTANT

- Torque Values listed only apply if Hendrickson supplied fasteners are used.
- Do not exceed torque on U-bolt locknuts.
- U-bolt thread must be clean and oiled with SAE 20.

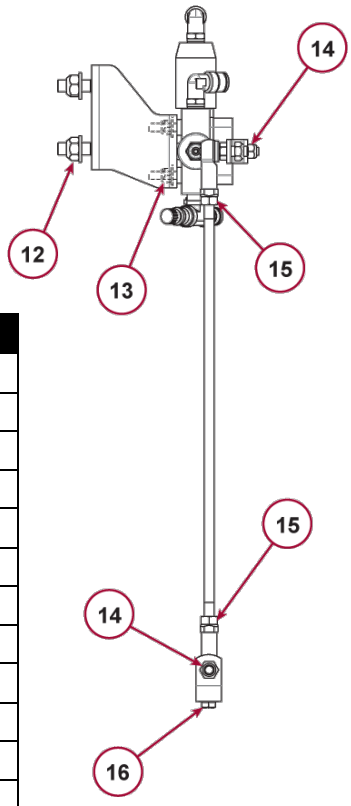

Item	Description	Thread – Grade	Torque (Nm)
1	Chassis to Hanger, Air Spring Bracket, Shock Mount	M20 x 2.5 – Class 10.9	420
2	Transverse Torque Rod Axle Side – Bar Pin	M16 x 2.0 – Class 10.9	215
		3/4”-10 UNC-2b – Grade 8	260
	Transverse Torque Rod Axle Side – Tapered	1-1/4”-12 UNF-3B – Grade 5	270
3	Transverse Torque Rod Chassis Side	M16 x 2.5 – Class 10.9	215
		5/8”-11 UNC – Grade 8	215
4	Upper Shock Fastener	1/2”-13 UNC – Grade 8	80
5	Air Spring to Frame Hanger	1/2”13 UNC-2B – Grade 5	35
6	Cross Channel to MSM	3/4”-10 UNC-2B – Grade 8	390
7	Lower Shock Fastener	3/4”-10 UNC-2B – Grade 8	80
8	Air Spring to Cross Channel	1/2”-13 UNC-2B – Grade 8	35
9	U-Bolts	M18 x 1.5 – Class 10.9	350
		M20 x 1.5 – Class 10.9	480
		3/4”-16 UNF-2A – Grade 8	400
		7/8”-14 UNF-2A – Grade 8	580
10	Longitudinal Torque Rod Bar	5/8”-11 UNC – Grade 8	230
11	Rebound Roller Bolt	1/2”-13 UNC – Grade 8	80
12	HCV Bracket to Chassis	-	40
13	HCV to Chassis Bracket	-	10
14	HCV Arm Linkage	5/16”-18 UNF-2B	15
15	HCV Link Rod Locknuts	5/16-24 UNF	10
16	HCV Lower Link Bracket to Channel	-	10

AMENDMENT RECORD

Revision	Date	Page	Remarks
B	Jun-2013	13	Revise Figure 5 to show alignment shim location.
B	Jul-2019	All	Minor amendments throughout. Date updated but technical data and revision status unchanged.
C	Dec-2023	9, 39	Correct HAS 461 nomenclature. Update transverse torque rod specifications.
D	Oct-2024	35	Add procedures for HI-TORQUE™ shock absorbers.
E	Sep-2025	18, 39	Update torque on Fig 7 to 10Nm. Expand & update torque chart.

HENDRICKSON
The World Rides On Us™

Actual product performance may vary depending upon vehicle configuration, operation, service and other factors.
All applications must comply with applicable Hendrickson specifications and must be approved by the respective vehicle manufacturer with the vehicle in its original, as-built configuration.
Contact Hendrickson for additional details regarding specifications, applications, capacities, and operation, service and maintenance instructions.

COPYRIGHT ©2011 – 2025
HENDRICKSON ASIA PACIFIC PTY LTD
ALL RIGHTS RESERVED

ABN 21 004 992 769
32-44 Letcon Dve/P.O. Box 1063,
Dandenong, South Vic 3175 Australia
Phone 61.3.8792 3600 Fax 61.3.8792.3699
www.hendrickson.com.au