NOTES:

1. SEE L1073 FOR INFORMATION ON ASSEMBLY, WELDING PROCEDURE, AND ALIGNMENT.
2. SEE SERVICE MANUAL FOR INFORMATION CONCERNING MAINTENANCE PROCEDURE.
3. MANUFACTURED UNDER ONE OR MORE OF THE FOLLOWING PATENTS:
   OTHER PATENTS PENDING U.S. PATENT NOS. – 5,366,237 – 4,166,640
4. REQUIRED CROSSMEMBER LOCATIONS ARE SHOWN. ACTUAL SIZE AND SHAPE MAY VARY WITH TRAILER DESIGN. IT IS THE RESPONSIBILITY OF THE SUSPENSION INSTALLER TO ENSURE STRUCTURAL ADEQUACY OF TRAILER FRAME AND CROSSMEMBERS.
5. SEE L1182 FOR HEIGHT CONTROL KIT OPTIONS.
6. SEE PAGE 3 FOR C–CHANNEL REQUIREMENTS.
7. FOR NON HENDRICKSON SLIDER, THE OPTION OF NONE FOR FRAME ATTACHMENT SHOULD BE SELECTED. THE SUSPENSION WILL BE SHIPPED WITHOUT FRAME BRACKETS AND AIR SPRING MOUNTING PLATES. THE SFK CONTAINS FRAME BRACKETS AND AIR SPRING MOUNTING PLATES. THIS KIT IS PURCHASED SEPARATELY AND SHIPPED DIRECTLY TO THE SLIDER MANUFACTURER.
8. NOTE SPECIAL AIR SPRING MOUNTING FOR 30K SUSPENSIONS.
9. SEE D–29431 FOR DIMENSIONS AND CROSSMEMBER LOCATIONS.
10. FOR BOLT–ON MOUNTING PATTERNS, SEE DRAWING D–26651.

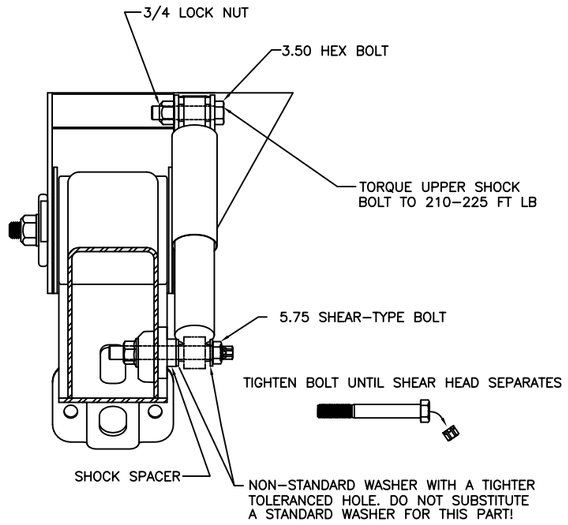

O.E.M. INSTALLED SHOCK BOLT KIT

C–CHANNEL REQUIREMENT WHEN USING UNDER BEAM LIFT ASSEMBLY

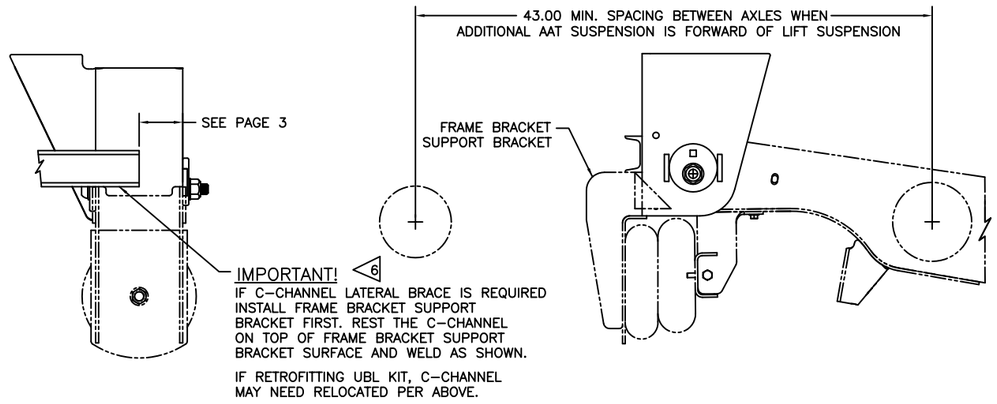

8 30K AIR SPRING MOUNTING

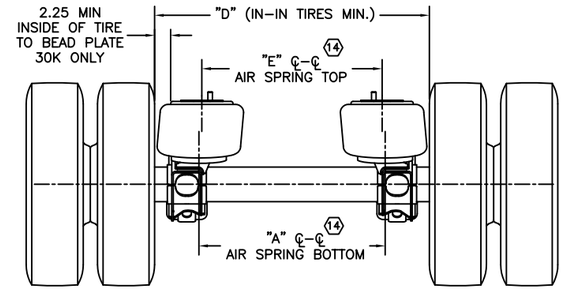

CAUTION

CLEARANCE SPECIFICATIONS:

a) 1.0 INCH MINIMUM CLEARANCE REQUIRED BETWEEN TOP OF TIRE AND BOTTOM OF TRAILER STRUCTURE WHEN AXLE IS AT FULL JOUNCE.
b) 2.0 INCHES MINIMUM CLEARANCE REQUIRED BETWEEN INSIDE OF TIRE AND TRAILER STRUCTURE FOR LATERAL MOVEMENT.
c) .75 INCH MINIMUM CLEARANCE MUST BE MAINTAINED AROUND AIR SPRING WHEN IT IS AT MAXIMUM DIAMETER.
d) SEE "30K AIR SPRING MOUNTING" VIEW FOR MINIMUM AIR SPRING BEAD PLATE CLEARANCE FOR 30K SUSPENSIONS.

MODEL	23K & 25K						30K					
TRACK WIDTH	71.5	73.0	14 75.5	77.5	83.5	85.0	71.5	73.0	14 75.5	77.5	83.5	85.0
DIMENSION "A" (IN)	31.00	32.50	35.00	37.00	43.00	44.50	31.00	32.50	35.00	37.00	43.00	44.50
DIMENSION "B" (IN)	35.00	36.50	39.00	41.00	47.00	48.50	35.00	36.50	39.00	41.00	47.00	48.50
DIMENSION "C" (IN)	42.25	43.75	46.25	48.25	54.25	55.75	42.25	43.75	46.25	48.25	54.25	55.75
DIMENSION "D" (IN)*	46.50	48.00	50.50	52.50	58.50	60.00	46.50	48.00	50.50	52.50	58.50	60.00
DIMENSION "E" (IN)	31.00	32.50	35.00	37.00	43.00	44.50	30.00	31.50	34.00	36.00	42.00	43.50

*Contact Hendrickson Engineering for direction when Tire Spacing is less than the charted values

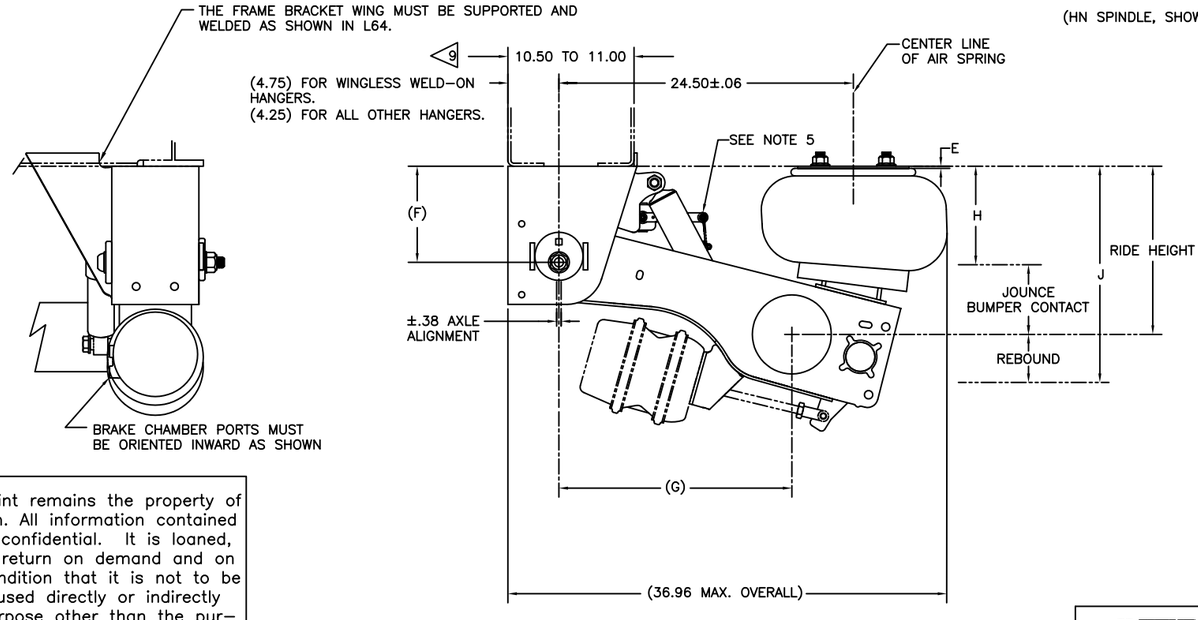

SEE PAGE 2 FOR TABULATED DIMENSIONS SHOWN ABOVE

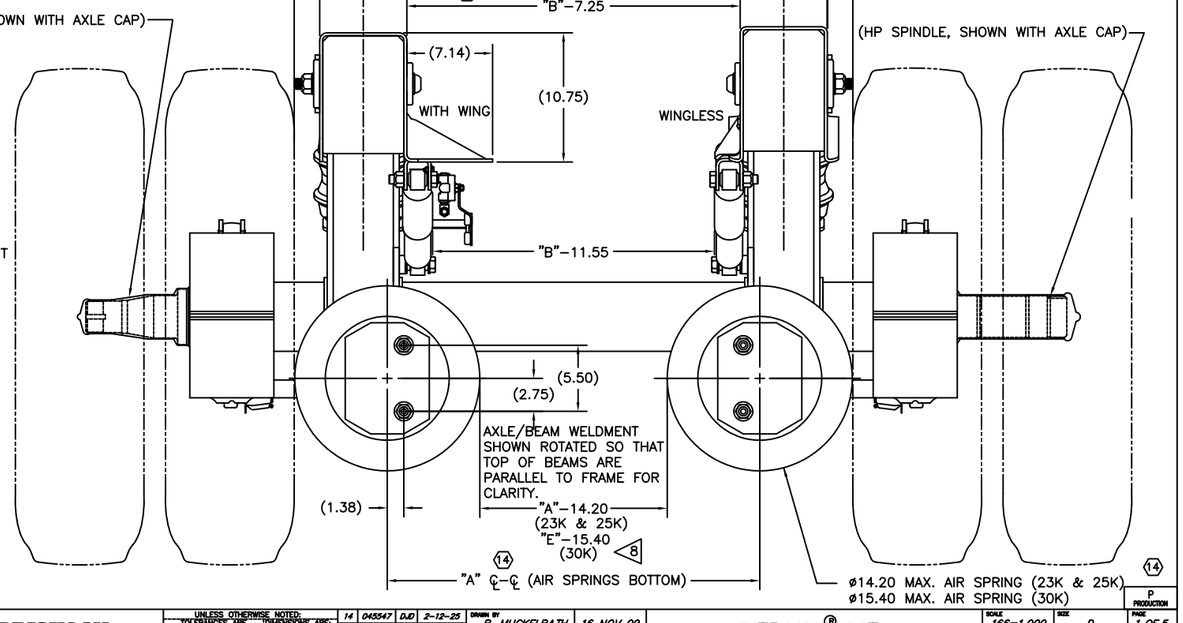

This Print remains the property of Hendrickson. All information contained thereon is confidential. It is loaned, subject to return on demand and on express condition that it is not to be copied or used directly or indirectly for any purpose other than the purpose for which it has been loaned to you.

HENDRICKSON
TRAILER COMMERCIAL VEHICLE SYSTEMS
2070 INDUSTRIAL PLACE S.E., CANTON, OH 44707–2900 U.S.A.

UNLESS OTHERWISE NOTED: TOLERANCES ARE: DIMENSIONS ARE: INCHES. X: ± .1, .XX: ± .06, .XXX: ± .030, ANGULAR: ± 0.5°. 3RD ANGLE PROJECTION. DIMENSIONS ADHERE TO ANSI Y14.5M–1982

REV.	ECN NO.	BY	DATE
14	045547	DJD	2–12–25
13	042444	DJD	9–13–23
12	33091	DJD	10/2/19
11	31878	PBA	08/13/18

DRWN BY B. MUCKELRATH 16 NOV 09
CHK'D BY C. ANDERSON
APP'D BY S. FULTON

THIS DRAWING IS THE CONFIDENTIAL PROPERTY OF HENDRICKSON

INTRAAX ® AAT INSTALLATION DRAWING

P PRODUCTION
SCALE .166=1.000 | SIZE D | PAGE 1 OF 5
DRAWING No. D–30815

AAT 23K DIMENSIONS

RIDE HEIGHT	JOUNCE ◁3	REBOUND ◁3	BUMPER CONTACT	E	F	G	H ◁4	J ◁4
STANDARD TRAVEL								
13.5	3.1	5.4	2.5	.19	8.0	19.5	10.4	18.9
14.0	3.6	4.9	3.0			19.4		
15.0	3.7	3.9	3.2			19.0	11.3	
16.0	3.8	4.8	3.2	.94	10.0	19.4	12.2	20.8
17.0	3.8	3.8	3.2	.19		19.0	13.2	
18.0	3.8	4.8	3.3	.94	12.0	19.4	14.2	22.8
19.0	3.9	3.8	3.3	2.06		19.0	15.1	
LIMITED REBOUND TRAVEL								
14.0	3.6	3.6	3.0	.19	8.0	19.4	10.4	17.5
16.0	3.8	3.3	3.2	.94	10.0		12.2	19.3
18.0	3.8	3.3	3.3		12.0		14.2	21.3
HIGH CONTROL TRAVEL								
13.5	2.7	5.9	2.2	.19	10.0	20.0	10.8	19.4
14.0	3.2	5.4	2.7			19.9		
15.0	3.4	4.4	2.8			19.7	11.6	
16.0	3.5	5.7	2.9	.94	12.0	19.9	12.5	21.7
17.0	3.5	4.7	2.9	.19		19.7	13.5	
LIMITED JOUNCE TRAVEL								
14.0	2.7	4.9	2.2	.19	8.0	19.4	11.3	18.9
15.0	2.8	3.9	2.3	1.31		19.0	12.2	
16.0	2.8	4.8	2.2	.19	10.0	19.4	13.2	20.8
17.0	2.9	3.8	2.3	1.31		19.0	14.1	

AAT 25K DIMENSIONS

RIDE HEIGHT	JOUNCE ◁3	REBOUND ◁3	BUMPER CONTACT	E	F	G	H ◁4	J ◁4
STANDARD TRAVEL								
13.5	2.9	5.4	2.3	.19	8.0	19.5	10.6	18.9
14.0	3.4	4.9	2.8			19.4		
15.0	3.6	3.9	3.0			19.0	11.5	
16.0	3.6	4.8	3.0	.94	10.0	19.4	12.5	20.8
17.0	3.6	3.8	3.1	.19		19.0	13.5	
18.0	3.7	4.8	3.1	.94	12.0	19.4	14.4	22.8
19.0	3.7	3.8	3.2	2.06		19.0	15.4	
LIMITED REBOUND TRAVEL								
14.0	3.4	3.6	2.8	.19	8.0	19.4	10.7	17.6
16.0	3.6	3.3	3.0	.94	10.0		12.5	19.3
18.0	3.7	3.3	3.1		12.0		14.4	21.3
HIGH CONTROL TRAVEL								
13.5	2.6	5.9	2.0	.19	10.0	20.0	11.0	19.4
14.0	3.1	5.4	2.5			19.9		
15.0	3.2	4.4	2.7			19.7	11.9	
16.0	3.3	5.7	2.7	.94	12.0	19.9	12.8	21.7
17.0	3.3	4.7	2.7	.19		19.7	13.8	
LIMITED JOUNCE TRAVEL								
14.0	2.6	4.9	2.0	.19	8.0	19.4	11.4	18.9
15.0	2.7	3.9	2.1	1.31		19.0	12.3	
16.0	2.6	4.8	2.1	.19	10.0	19.4	13.4	20.8
17.0	2.7	3.8	2.2	1.31		19.0	14.3	

AAT 30K DIMENSIONS

RIDE HEIGHT	JOUNCE ◁3	REBOUND ◁3	BUMPER CONTACT	E	F	G	H ◁4	J ◁4
STANDARD TRAVEL								
13.5	2.9	5.4	2.3	.19	8.0	19.5	10.6	18.9
14.0	3.4	4.9	2.8			19.4		
15.0	3.6	3.9	3.0			19.0	11.5	
16.0	3.6	4.8	3.0	.94	10.0	19.4	12.5	20.8
17.0	3.6	3.8	3.1	.19		19.0	13.5	
18.0	3.7	4.8	3.1	.94	12.0	19.4	14.4	22.8
19.0	3.7	3.8	3.2	2.06		19.0	15.4	
HIGH CONTROL TRAVEL								
13.5	2.6	5.9	2.0	.19	10.0	20.0	11.0	19.4
14.0	3.1	5.4	2.5			19.9		
15.0	3.2	4.4	2.7			19.7	11.9	
16.0	3.3	5.7	2.7	.94	12.0	19.9	12.8	21.7
17.0	3.3	4.7	2.7	.19		19.7	13.8	
LIMITED JOUNCE TRAVEL								
14.0	2.6	4.9	2.0	.19	8.0	19.4	11.4	18.9
15.0	2.7	3.9	2.1	1.31		19.0	12.3	
16.0	2.6	4.8	2.1	.19	10.0	19.4	13.4	20.8
17.0	2.7	3.8	2.2	1.31		19.0	14.3	

AAT 23K ZMD DIMENSIONS

RIDE HEIGHT	JOUNCE ◁3	BUMPER CONTACT	REBOUND ◁3	E	F	G	H ◁4	J ◁4
STANDARD TRAVEL								
14.0	3.2	2.8	4.3	.19	8.0	19.4	10.8	18.3
15.0	3.4	3.0	4.5	.19		19.0	11.6	19.5
16.0	3.1	2.7	5.2	1.31	10.0	19.4	12.9	21.2
17.0	3.4	3.1	4.2	.19		19.0	13.6	

AAT 25K ZMD DIMENSIONS

RIDE HEIGHT	JOUNCE ◁3	REBOUND ◁3	BUMPER CONTACT	E	F	G	H ◁4	J ◁4
STANDARD TRAVEL								
14.0	3.2	4.3	2.8	.19	8.0	19.4	10.8	18.3
15.0	3.4	4.5	3.0			19.0	11.6	19.5
16.0	3.1	5.2	2.7	1.31	10.0	19.4	12.9	21.2
17.0	3.4	4.2	3.1	.19		19.0	13.6	
18.0	3.4	5.3	3.1	.94	12.0	19.4	14.6	23.3
19.0	3.5	4.3	3.2	2.06		19.0	15.5	

NOTES:

1. SEE L600 FOR SUSPENSION WEIGHT.
2. SEE L1073 FOR RIDE HEIGHT RANGE.

◁3 JOUNCE AND REBOUND DIMENSIONS CHANGE AS THE RIDE HEIGHT CHANGES FROM THE NOMINAL POSITION.

◁4 DIMENSIONS "H" & "J" WILL REMAIN CONSTANT REGARDLESS OF RIDE HEIGHT VARIATION FROM NOMINAL POSITION.

5. RIDE HEIGHT − JOUNCE = "H"
   RIDE HEIGHT + REBOUND = "J"

This Print remains the property of Hendrickson. All information contained thereon is confidential. It is loaned, subject to return on demand and on express condition that it is not to be copied or used directly or indirectly for any purpose other than the purpose for which it has been loaned to you.

14

P
PRODUCTION

HENDRICKSON
TRAILER COMMERCIAL VEHICLE SYSTEMS
2070 INDUSTRIAL PLACE S.E., CANTON, OH 44707-2800 U.S.A.

UNLESS OTHERWISE NOTED:
TOLERANCES ARE: DIMENSIONS ARE: INCHES
.X: ± –
.XX: ± –
.XXX: ± –
ANGULAR: ± –
3RD ANGLE PROJECTION
DIMENSIONS ADHERE TO ANSI Y14.5M-1982

REV.	ECN NO.	BY	DATE
14	045547	DJD	2-12-25
13	043444	DJD	9-13-23
12	33091	DJD	10/2/19
11	31878	PBA	08/13/18

DRAWN BY B. MUCKELRATH 16 NOV 09
CHK'D BY C. ANDERSON
APP'D BY: S. FULTON
THIS DRAWING IS THE CONFIDENTIAL PROPERTY OF HENDRICKSON

INTRAAX® AAT
INSTALLATION DRAWING

SCALE .25=1.00 | SIZE D | PAGE 2 OF 5
DRAWING No. D-30815

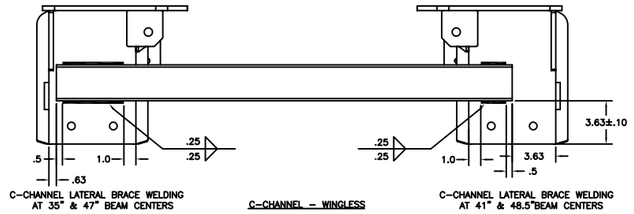

C-CHANNEL LATERAL BRACE WELDING AT 35" & 47" BEAM CENTERS

C-CHANNEL - WINGLESS

C-CHANNEL LATERAL BRACE WELDING AT 41" & 48.5"BEAM CENTERS

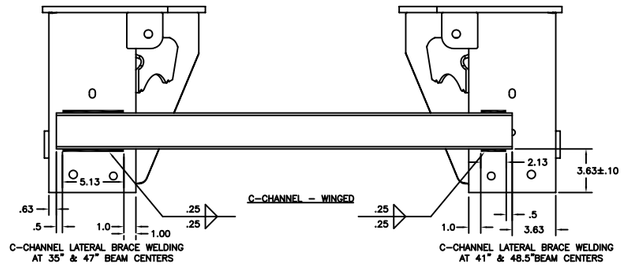

C-CHANNEL LATERAL BRACE WELDING AT 35" & 47" BEAM CENTERS

C-CHANNEL LATERAL BRACE WELDING AT 41" & 48.5"BEAM CENTERS

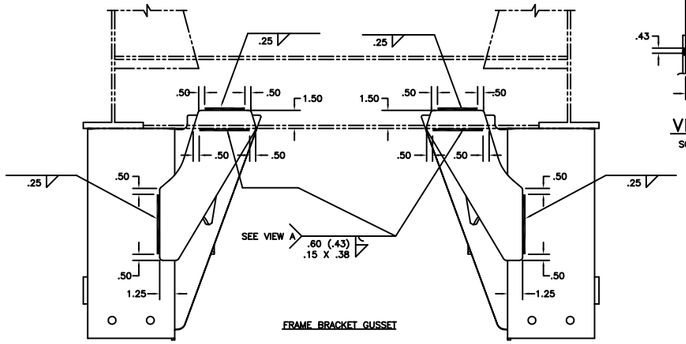

FRAME BRACKET GUSSET

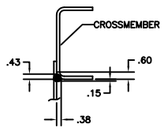

VIEW A
SCALE: .25=1.00

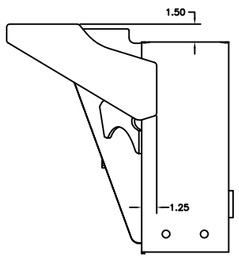

VIEW B
SCALE: .25=1.00
FOR SOME UBL INSTALLATIONS

FRAME BRACKET BRACING										
FRAME ATTACHMENT--		WELD-ON		BOLT-ON						
CHANNEL		STANDARD		STANDARD		BOLT-ON CHANNEL WITH STRUTS		HD BOLT-ON C-CHANNEL WITH STRUTS		
HIGH CONTROL--		YES -OR- NO		NO	YES	NO	YES	NO	YES	
FRAME BRACKET STYLE--		WINGED	WINGLESS	WINGED		WINGED				
RIDE HEIGHT	13.5	FRAME BRACKET GUSSET REQUIRED	C-CHANNEL REQUIRED	NONE	C-CHANNEL REQUIRED	WITH STRUTS	WITH STRUTS			
	14.0									
	15.0									
	16.0							WITH STRUTS	WITH STRUTS	
	17.0									
	18.0			C-CHANNEL REQUIRED						
	19.0									

* HIGH CONTROL IS NOT AVAILABLE IN 18 AND 19 RIDE HEIGHTS.

IT IS THE RESPONSIBILITY OF THE SUSPENSION INSTALLER TO PROVIDE AN EQUIVALENT FRAME BRACKET SUPPORT IF THE FRAME BRACKET BRACING IS NOT PURCHASED FROM HENDRICKSON.

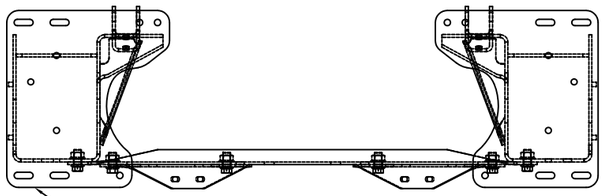

HARDENED WASHERS (PER ASTM F436) ARE RECOMMENDED FOR ALL SLOTTED HOLE LOCATIONS.

INSTALLATION SEQUENCE:

1. LOCATE FRAME BRACKETS ONTO TRAILER FRAME AND LOOSELY INSTALL MOUNTING BOLTS USING HARDENED WASHERS AT ALL SLOTTED HOLE LOCATIONS.
2. INSTALL CROSSMEMBER, USING 5/8" MOUNTING HOLES ON FRONT OF FRAME BRACKETS.
3. INSTALL STRUTS, USING 5/8" MOUNTING HOLES IN FRAME BRACKET GUSSET AND CROSSMEMBER.
4. TIGHTEN CROSSMEMBER MOUNTING BOLTS AND STRUT MOUNTING BOLTS.
5. TIGHTEN FRAME BRACKET MOUNTING BOLTS.

This Print remains the property of Hendrickson. All information contained thereon is confidential. It is loaned, subject to return on demand and on express condition that it is not to be copied or used directly or indirectly for any purpose other than the purpose for which it has been loaned to you.

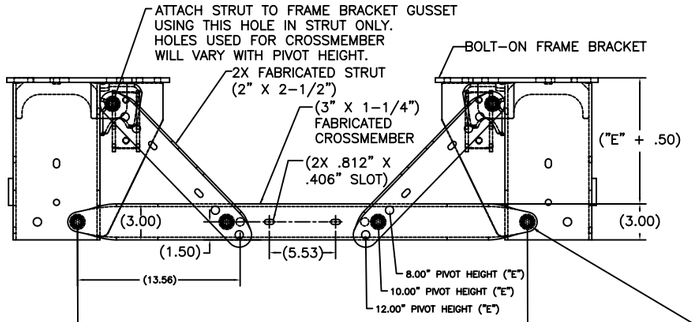

*31.50 (71.5" TRACK WIDTH)
*33.00 (73.0" TRACK WIDTH)
*37.50 (77.5" TRACK WIDTH)
*43.50 (83.5" TRACK WIDTH)

OTHER TRACK WIDTHS NOT AVAILABLE
*THIS DIMENSION MUST BE MAINTAINED WITHIN ±.06"

13.5 THROUGH 19.0 RIDE HEIGHTS FOR BOLT ON UNITS ONLY.
BOLT-ON C-CHANNEL WITH STRUTS

USE 5/8" HEX HEAD FLANGE SCREW WITH SPIRALOCK® FLANGE NUT.
(SEE KIT A-30720 FOR CROSSMEMBER & STRUTS, KIT INCLUDES 6 SCEWS & NUTS)
TORQUE TO 190±20 FT-LB.
((TORQUE BY NUT WHERE POSSIBLE))

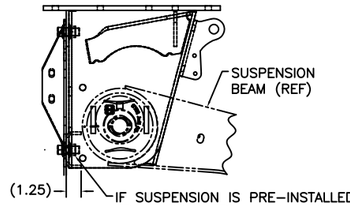

IF SUSPENSION IS PRE-INSTALLED IN FRAME BRACKETS, INSTALLATION OF CROSSMEMBER WILL REQUIRE HOLDING THIS NUT WITH AN OPEN-END WRENCH, WHILE TURNING THE BOLT HEAD TO TIGHTEN. (THERE IS NOT ENOUGH ROOM AHEAD OF THE BUSHING TUBE TO USE A BOX-END OR SOCKET WRENCH, NOR TO INSERT THE BOLT FROM INSIDE THE FRAME BRACKET).

BOLT-ON C-CHANNEL WITH STRUTS

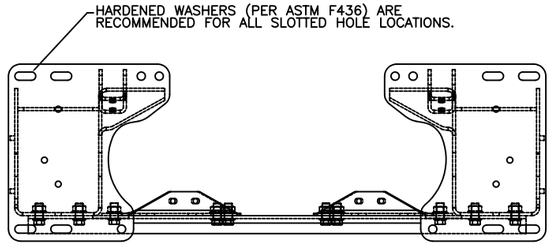

HARDENED WASHERS (PER ASTM F436) ARE RECOMMENDED FOR ALL SLOTTED HOLE LOCATIONS.

INSTALLATION SEQUENCE:

1. LOCATE FRAME BRACKETS ONTO TRAILER FRAME AND LOOSELY INSTALL MOUNTING BOLTS USING HARDENED WASHERS AT ALL SLOTTED HOLE LOCATIONS.
2. INSTALL CROSSMEMBER, USING 5/8" MOUNTING HOLES ON FRONT OF FRAME BRACKETS.
3. INSTALL STRUTS, USING 5/8" MOUNTING HOLES IN FRAME BRACKET GUSSET AND CROSSMEMBER.
4. TIGHTEN CROSSMEMBER MOUNTING BOLTS AND STRUT MOUNTING BOLTS.
5. TIGHTEN FRAME BRACKET MOUNTING BOLTS.

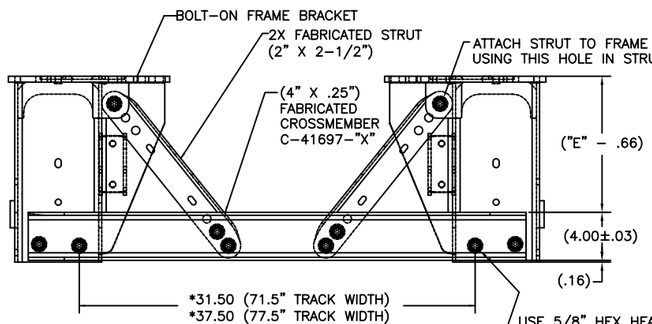

*31.50 (71.5" TRACK WIDTH)
*37.50 (77.5" TRACK WIDTH)

OTHER TRACK WIDTHS NOT AVAILABLE
*THIS DIMENSION MUST BE MAINTAINED WITHIN ±.06"

16.0 THROUGH 19.0 RIDE HEIGHTS FOR BOLT ON UNITS ONLY.
HD BOLT-ON C-CHANNEL WITH STRUTS

USE 5/8" HEX HEAD FLANGE SCREW WITH SPIRALOCK® FLANGE NUT.
(SEE KIT A-41823-1 FOR CROSSMEMBER & STRUTS, KIT INCLUDES 10 SCEWS & NUTS)
TORQUE TO 190±20 FT-LB.
((TORQUE BY NUT WHERE POSSIBLE))

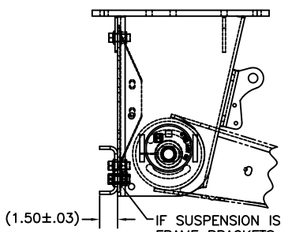

IF SUSPENSION IS PRE-INSTALLED IN FRAME BRACKETS, INSTALLATION OF CROSSMEMBER WILL REQUIRE HOLDING THIS NUT WITH AN OPEN-END WRENCH, WHILE TURNING THE BOLT HEAD TO TIGHTEN. (THERE IS NOT ENOUGH ROOM AHEAD OF THE BUSHING TUBE TO USE A BOX-END OR SOCKET WRENCH, NOR TO INSERT THE BOLT FROM INSIDE THE FRAME BRACKET).

4-INCH HEAVY DUTY BOLT-ON C-CHANNEL WITH STRUTS

⟨14⟩

H. HENDRICKSON TRAILER COMMERCIAL VEHICLE SYSTEMS 2070 INDUSTRIAL PLACE S.E., CANTON, OH 44707-2800 U.S.A.	UNLESS OTHERWISE NOTED: TOLERANCES ARE: DIMENSIONS ARE: INCHES .X: ± – .XX: ± – .XXX: ± – ANGULAR: ± – 3RD ANGLE PROJECTION DIMENSIONS ADHERE TO ANSI Y14.5M-1982	REV.	ECN NO.	BY	DATE	DRAWN BY: B. MUCKELRATH	16 NOV 9	THIS DRAWING IS THE CONFIDENTIAL PROPERTY OF HENDRICKSON	INTRAAX ® AAT INSTALLATION DRAWING
		14	045547	DJD	2-12-25	CHK'D BY: C. ANDERSON			
		13	042444	DJD	9-13-23				
		12	33091	DJD	10/2/19				
		11	31876	DJD	08/13/18	APP'D BY: S. FULTON			

P PRODUCTION

SCALE .166=1.000 | SIZE D | PAGE 3 OF 5

DRAWING No. D-30815

AAT 23K RAISED CENTER AXLE DIMENSIONS

RIDE HEIGHT	◁3 JOUNCE	BUMPER CONTACT	◁3 REBOUND	E	F	G	◁5 H	◁5 J
STANDARD TRAVEL								
13.5	3.1	2.5	5.4	.19	8.0	19.5	10.4	18.9
14.0	3.6	3.0	4.9			19.4		
15.0	3.7	3.2	3.9			19.0	11.3	
16.0	3.8	3.2	4.8	.94	10.0	19.4	12.2	20.8
17.0	3.8	3.2	3.8	.19		19.0	13.2	
18.0	3.8	3.3	4.8	.94	12.0	19.4	14.2	22.8
19.0	3.9	3.3	3.8	2.06		19.0	15.1	
LIMITED REBOUND TRAVEL								
14.0	3.6	3.0	3.6	.19	8.0	19.4	10.4	17.5
16.0	3.8	3.2	3.3	.94	10.0		12.2	19.3
18.0	3.8	3.3	3.3		12.0		14.2	21.3
HIGH CONTROL TRAVEL								
13.5	2.7	2.2	5.9	.19	10.0	20.0	10.8	19.4
14.0	3.2	2.7	5.4			19.9		
15.0	3.4	2.8	4.4			19.7	11.6	
16.0	3.5	2.9	5.7	.94	12.0	19.9	12.5	21.7
17.0	3.5	2.9	4.7	.19		19.7	13.5	

AAT 25K RAISED CENTER AXLE DIMENSIONS

RIDE HEIGHT	◁3 JOUNCE	BUMPER CONTACT	◁3 REBOUND	E	F	G	◁5 H	◁5 J
STANDARD TRAVEL								
13.5	2.9	2.3	5.4	.19	8.0	19.5	10.6	18.9
14.0	3.4	2.8	4.9			19.4		
15.0	3.6	3.0	3.9			19.0	11.5	
16.0	3.6	3.0	4.8	.94	10.0	19.4	12.5	20.8
17.0	3.6	3.1	3.8	.19		19.0	13.5	
18.0	3.7	3.1	4.8	.94	12.0	19.4	14.4	22.8
19.0	3.7	3.2	3.8	2.06		19.0	15.4	
LIMITED REBOUND TRAVEL								
14.0	3.4	2.8	3.6	.19	8.0	19.4	10.7	17.6
16.0	3.6	3.0	3.3	.94	10.0		12.5	19.3
18.0	3.7	3.1	3.3		12.0		14.4	21.3
HIGH CONTROL TRAVEL								
13.5	2.6	2.0	5.9	.19	10.0	20.0	11.0	19.4
14.0	3.1	2.5	5.4			19.9		
15.0	3.2	2.7	4.4			19.7	11.9	
16.0	3.3	2.7	5.7	.94	12.0	19.9	12.8	21.7
17.0	3.3	2.7	4.7	.19		19.7	13.8	

AAT 23K RAISED CENTER AXLE ZMD DIMENSIONS

RIDE HEIGHT	◁3 JOUNCE	BUMPER CONTACT	REBOUND LIMITER ENGAGEMENT	◁3 ◁4 MAXIMUM DYNAMIC REBOUND	E	F	G	◁5 H	◁5 J
STANDARD TRAVEL									
14.0	3.2	2.8	2.2	4.3	.19	8.0	19.4	10.8	18.3
15.0	3.4	3.0	2.4	4.5	.19		19.0	11.6	19.5
16.0	3.1	2.7	3.2	5.2	1.31	10.0	19.4	12.9	21.2
17.0	3.4	3.1	2.2	4.2	.19		19.0	13.6	
LIMITED REBOUND TRAVEL									
14.0	3.2	2.8	2.2	4.3	.19	8.0	19.4	10.8	18.3
16.0	3.1	2.7	1.9	4.0	1.31	10.0		12.9	20.0

AAT 25K RAISED CENTER AXLE ZMD DIMENSIONS

RIDE HEIGHT	◁3 JOUNCE	BUMPER CONTACT	REBOUND LIMITER ENGAGEMENT	◁3 ◁4 MAXIMUM DYNAMIC REBOUND	E	F	G	◁5 H	◁5 J
STANDARD TRAVEL									
14.0	3.2	2.8	2.2	4.3	.19	8.0	19.4	10.8	18.3
15.0	3.4	3.0	2.4	4.5	.19		19.0	11.6	19.5
16.0	3.1	2.7	3.2	5.2	1.31	10.0	19.4	12.9	21.2
17.0	3.4	3.1	2.2	4.2	.19		19.0	13.6	
LIMITED REBOUND TRAVEL									
14.0	3.2	2.8	2.2	4.3	.19	8.0	19.4	10.8	18.3
16.0	3.1	2.7	1.9	4.0	1.31	10.0		12.9	20.0

AAT 23K AND 25K RAISED CENTER AXLE DIMENSIONS

RIDE HEIGHT	RAISED HEIGHT AT RIDE HEIGHT	AT FULL JOUNCE (K)	AT FULL REBOUND (L)
STANDARD TRAVEL			
13.5	3.3	3.2	3.4
14.0	3.3	3.2	3.4
15.0	3.4	3.3	3.4
16.0	3.3	3.2	3.4
17.0	3.4	3.3	3.4
18.0	3.3	3.2	3.4
19.0	3.4	3.3	3.4
LIMITED REBOUND TRAVEL			
14.0	3.3	3.2	3.4
16.0	3.3	3.2	3.4
18.0	3.3	3.2	3.4
HIGH CONTROL TRAVEL			
13.5	3.1	3.0	3.4
14.0	3.2	3.0	3.4
15.0	3.3	3.1	3.4
16.0	3.2	3.0	3.4
17.0	3.3	3.1	3.4

This Print remains the property of Hendrickson. All information contained thereon is confidential. It is loaned, subject to return on demand and on express condition that it is not to be copied or used directly or indirectly for any purpose other than the purpose for which it has been loaned to you.

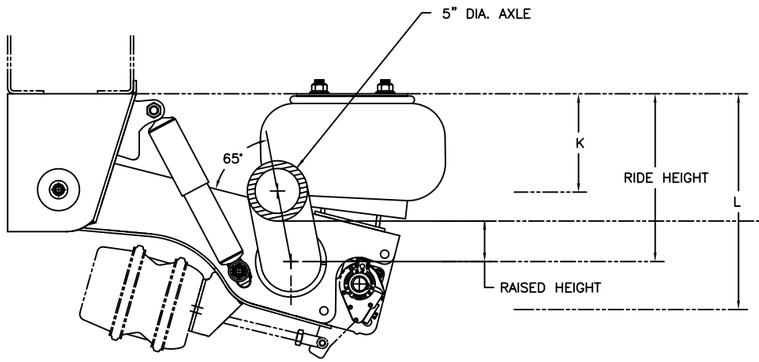

VIEW AA

SCALE: .166=1.000

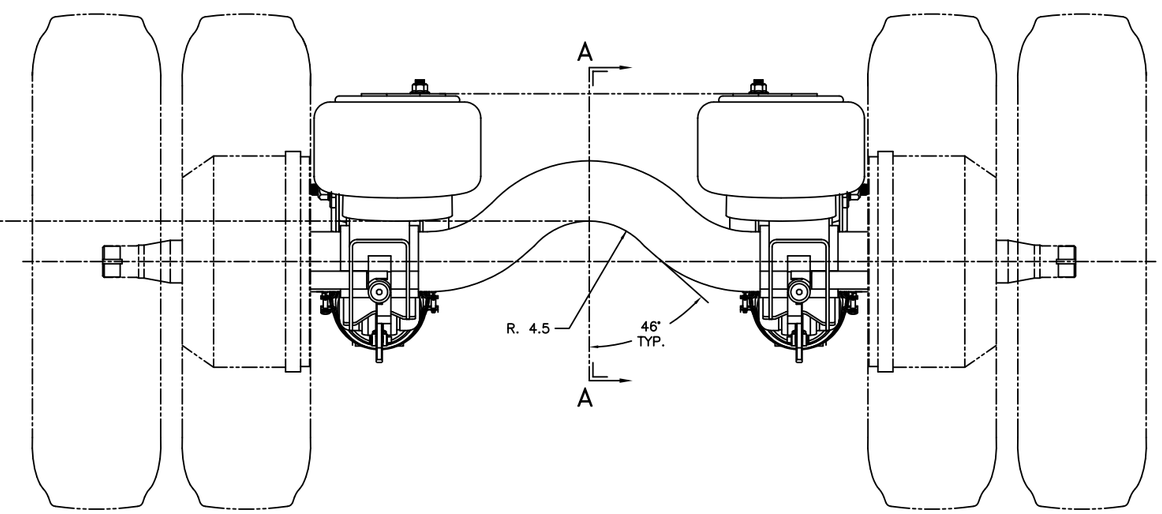

NOTES:

1. THIS PAGE IS FOR AAT 23K AND 25K SUSPENSIONS WITH RAISED CENTER AXLE OPTION.
2. SEE L1065 FOR SUSPENSION WEIGHT.

◁3 JOUNCE AND REBOUND DIMENSIONS CHANGES AS THE RIDE HEIGHT CHANGES FROM THE NOMINAL POSITION.

◁4 MAXIMUM DOWNWARD TRAVEL OF AXLE IN A DYNAMIC EVENT.

◁5 DIMENSIONS "H" & "J" WILL REMAIN CONSTANT REGARDLESS OF RIDE HEIGHT VARIATION FROM NOMINAL POSITION.

6. RIDE HEIGHT − JOUNCE = "H"
   RIDE HEIGHT + REBOUND = "J"

(14)

P PRODUCTION

HENDRICKSON
TRAILER COMMERCIAL VEHICLE SYSTEMS
2070 INDUSTRIAL PLACE S.E., CANTON, OH 44707-2900 U.S.A.

UNLESS OTHERWISE NOTED: TOLERANCES ARE: DIMENSIONS ARE: INCHES
.X: ± .1
.XX: ± .05
.XXX: ± .010
ANGULAR: ± 0.5°
3RD ANGLE PROJECTION
DIMENSIONS ADHERE TO ANSI Y14.5M-1982

REV.	ECN NO.	BY	DATE
14	045547	DJD	2-12-25
13	042444	DJD	9-13-23
12	33091	DJD	10/2/19
11	31876	PBA	08/13/18

DRAWN BY: B. MUCKELRATH — 16 NOV 09
CHK'D BY: C. ANDERSON
APP'D BY: S. FULTON

THIS DRAWING IS THE CONFIDENTIAL PROPERTY OF HENDRICKSON

INTRAAX ® AAT
INSTALLATION DRAWING

SCALE .166=1.000 | SIZE D | PAGE 4 OF 5
DRAWING No. D-30815

NOTES:

1. THIS PAGE IS FOR AAT 23K, 25K, AND 30K SUSPENSIONS WITH AIR DISC BRAKES OPTION.
2. MERITOR WABCO PAN22 BRAKE CALIPERS AND GUNITE DUCTILE IRON HUBS WITH GUNITE ROTORS REPRESENTED IN GRAPHICS.
3. NOT ALL HUB/ROTOR OPTIONS ARE AVAILABLE WITH ALL BRAKE OPTIONS.
4. AIR DISC BRAKES COMPATIBLE WITH 22.5" OR 24.5" TIRES ONLY.
5. NOTE SPECIAL AIR SPRING MOUNTING FOR 30K SUSPENSIONS.

5 30K AIR SPRING MOUNTING

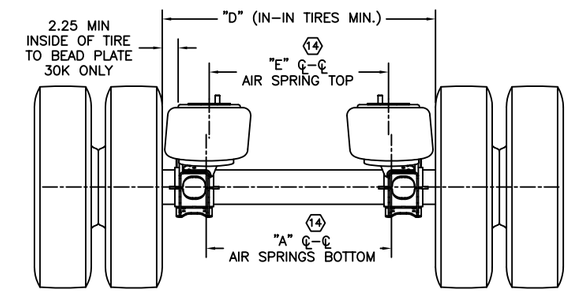

REFERENCE VIEWS WITH BRAKE CALIPERS, BRAKE CHAMBERS, HUB/ROTORS, AND ROTOR SHIELDS INSTALLED

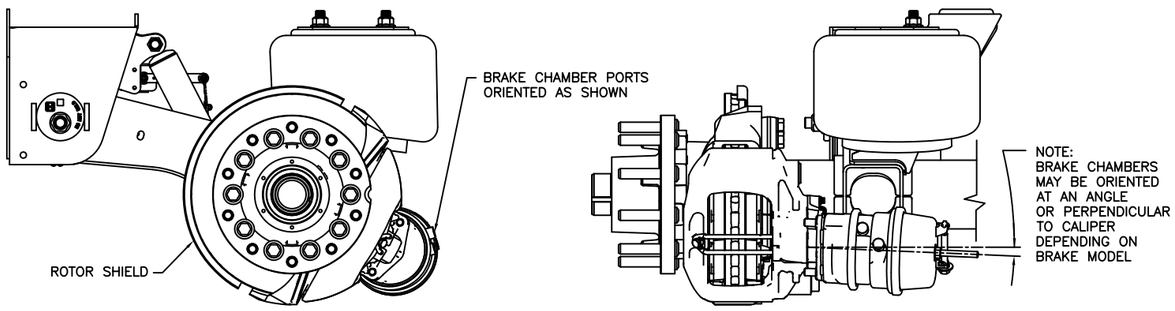

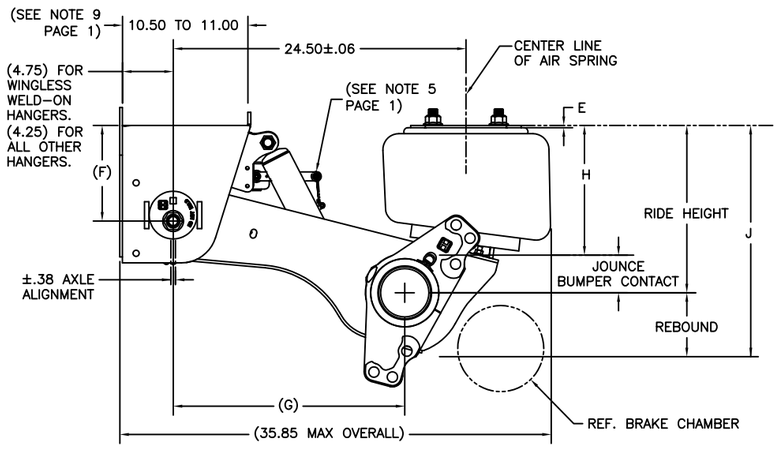

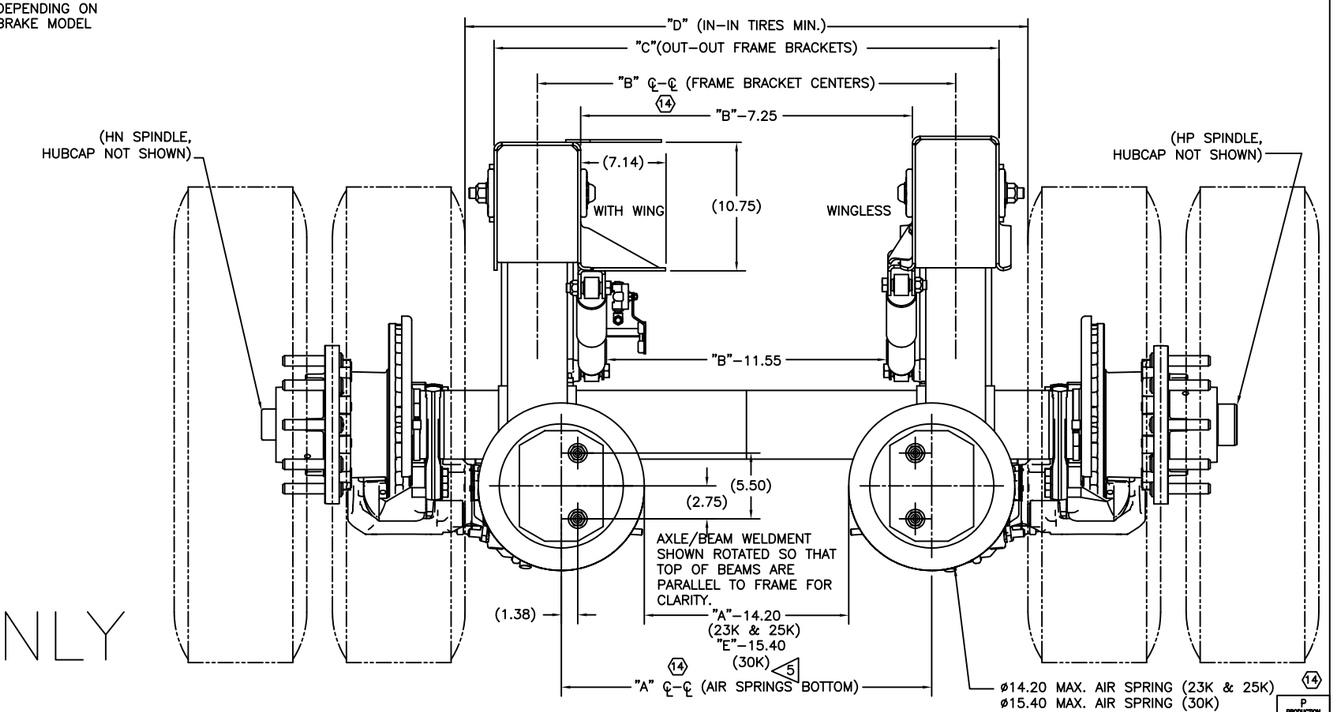

AIR DISC BRAKES ONLY

SEE PAGE 1 AND 2 FOR TABULATED DIMENSIONS AND NOTES

This Print remains the property of Hendrickson. All information contained thereon is confidential. It is loaned, subject to return on demand and on express condition that it is not to be copied or used directly or indirectly for any purpose other than the purpose for which it has been loaned to you.

HENDRICKSON
TRAILER COMMERCIAL VEHICLE SYSTEMS
2070 INDUSTRIAL PLACE S.E., CANTON, OH 44707-2600 U.S.A.

UNLESS OTHERWISE NOTED:
TOLERANCES ARE: .X: ± .1, .XX: ± .06, .XXX: ± .030, ANGULAR: ± 0.5°
DIMENSIONS ARE: INCHES
3RD ANGLE PROJECTION
DIMENSIONS ADHERE TO ANSI Y14.5M-1982

REV.	ECN NO.	BY	DATE
14	045547	DJD	2-12-25
13	042444	DJD	9-13-23
12	33091	DJD	10/2/19
11	31876	PBA	09/13/18

DRAWN BY: C. RADCLIFF 5/27/10
CHK'D BY: C. ANDERSON
APP'D BY: K. CARR
THIS DRAWING IS THE CONFIDENTIAL PROPERTY OF HENDRICKSON

INTRAAX® AAT
INSTALLATION DRAWING

SCALE .166=1.000 | SIZE D | PAGE 5 OF 5 | P PRODUCTION
DRAWING No. D-30815