Asia Pacific Region Only

TECHNICAL BULLETIN

AANT & AANL NARROW BUSH SUSPENSION UBL™ KIT INSTALLATION

LIT NO: 97117-217
DATE: August 2018 **REVISION:** A

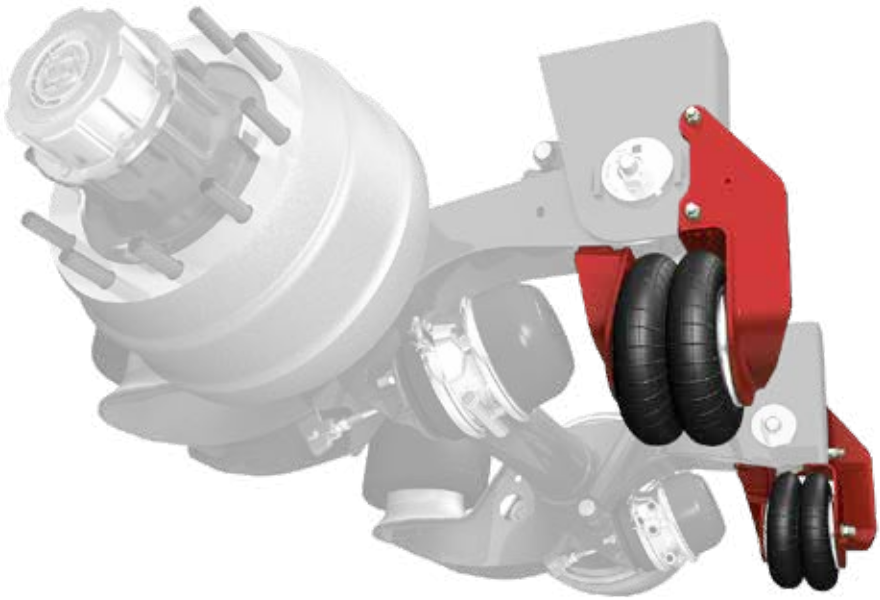

HENDRICKSON
The World Rides On Us™

TABLE OF CONTENTS

INTRODUCTION

This publication provides technical information to assist with the installation of Under Beam Lift™ (UBL™) kits for Hendrickson narrow (3-inch) TRI-FUNCTIONAL bush suspensions. This publication is design to suit narrow bush Hendrickson INTRAAX suspensions sold in the Australia, New Zealand and Asia Pacific regions.

It should be used in conjunction with Hendrickson engineering installation drawings for both the axle and the lift kit.

It differs from installation of early (pre-August 2018) AANT lift kits, which were a different design.

SERVICE NOTES

Before you begin:

- Read and understand all instructions and procedures before installing any component.
- Read and observe all Caution and Warning statements to help avoid personal injury or property damage.
- Follow your company's maintenance, service, installation and diagnostic practices.

Hendrickson reserves the right to make changes and improvements to its products and publications at any time. Check the Hendrickson Asia Pacific website at www.hendrickson.com.au for the latest available publications.

NOTE: Use only Hendrickson Genuine parts for servicing this suspension system.

IMPORTANT SAFETY NOTICE

Proper installation is important to the reliable operation of your Hendrickson suspension. The procedures recommended by Hendrickson and described in this publication are methods of performing such installation.

The warnings and cautions should be read carefully to help prevent personal injury and to assure that proper methods are used. Improper installation can cause damage to the vehicle and other property, personal injury, an unsafe operating condition or void the manufacturer's warranty.

Carefully read, understand and follow all safety related information within this publication.

EXPLANATION OF SIGNAL WORDS

Hazard signal words (such as Danger, Warning or Caution) appear in various locations throughout this publication. Information accented by one of these signal words must be observed at all times.

Additional notes are utilised to emphasise areas of procedural importance and provide suggestions for ease of repair. The following definitions indicate the use of these signal words as they appear throughout the publication.

DANGER Indicates immediate hazards which will result in severe personal injury or death.

WARNING Indicates hazards or unsafe practices which could result in severe personal injury or death.

CAUTION Indicates hazards or unsafe practices which could result in damage to machine or minor personal injury.

IMPORTANT An operating procedure, practice or condition that is essential to emphasise.

Ensure proper safety apparel is worn when welding and that any potential fire hazards are removed from the welding area. Basic welding safety gear includes leather boots, cuff-less full-length trousers, a flame-resistant welding jacket, welding gloves, a welding helmet, safety glasses and hair protection.

- Wear proper eye protection
- Wear clothing that protects your skin
- Work in a well-ventilated area
- Do not use petrol, or solvents that contain petrol. Petrol can explode.
- Hot solution tanks or alkaline solutions must be used correctly. Follow the manufacturer's recommended instructions and guidelines carefully to help prevent personal accident or injury.

Suitable personal protective equipment (PPE) must be in good condition and worn at appropriate times. This applies even if the task is only brief, because this is often when injuries occur.

However, PPE should be regarded only as a secondary safety measure because it will not compensate for unsafe work practices. If there are safer or better workplace procedures, then these should be adopted.

⚠**WARNING**: Do not modify or rework parts. Do not use substitute parts of the suspension or axle components. Use of a modified part or replacement part not authorised by Hendrickson may not meet Hendrickson specifications and can result in failure of the part, loss of vehicle control and possible personal injury or property damage. Use only Hendrickson authorised replacement parts. Do not modify parts without authorisation from Hendrickson.

⚠**CAUTION**: A mechanic using a service procedure or tool which has not been recommended by Hendrickson must first satisfy himself that neither his safety nor the vehicle's safety will be jeopardised by the method or tool selected. Individuals deviating in any manner from the provided instructions assume all risks of consequential personal injury or damage to equipment.

⚠**WARNING**: Always wear proper eye protection and other required personal protective equipment when performing vehicle maintenance, repair or service.

⚠**WARNING**: Solvent cleaners can be flammable, poisonous and can cause burns. To help avoid serious personal injury, carefully follow the manufacturer's product instructions and guidelines and the following procedures:

Ensure the PPE is:

- Suitable for the type of work
- Correct size and fit
- Properly stored and maintained

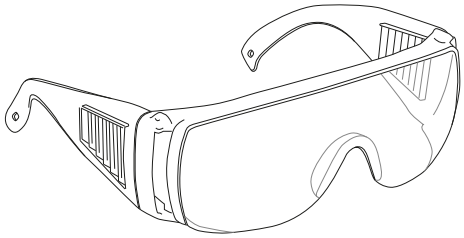

Wear safety glasses

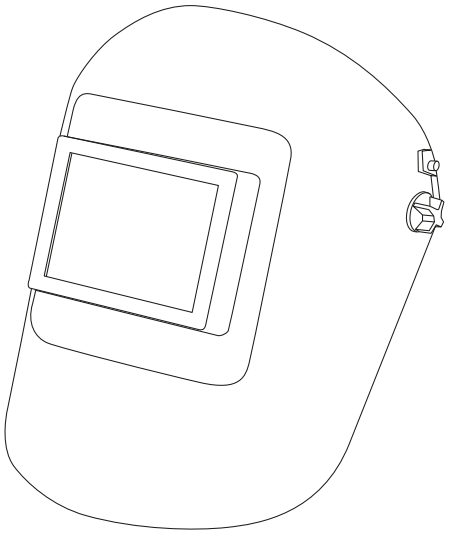

Use a welding helmet in good condition

Protective gloves are essential

WELDING PARAMETERS

NOTE: Welding must be performed by welders certified to AS1554 SP capability and shall satisfy the conditions of Clause 4.12.2 of AS 1554.1.

All welding must to the Australian Standard Structural steel welding, AS1554.1-2014.

WELDING HARDWARE TO AXLES

⚠**CAUTION**: When welding to or on the suspension, take every precaution to prevent bearing damage. When grounding welding equipment to the suspension, prevent current from passing through the wheel bearings.

A connection that places a wheel bearing between the ground cable connection and the weld area can damage the bearing by electric arcing.

For all welded connections, use the following parameters to achieve spray arc transfer:

SURFACE PREPARATION

The items to be welded must be at a minimum temperature of 16° C and must be free of moisture, dirt, scale, paint and grease.

ARC WELDING

Standard Electrode: AWS E7018 (oven dried)

- 3.2 mm (0.125") Diameter
  120-140 Amps DC
  Electrode Positive
- 4.0 mm (0.156") Diameter
  120-160 Amps DC
  Electrode Positive

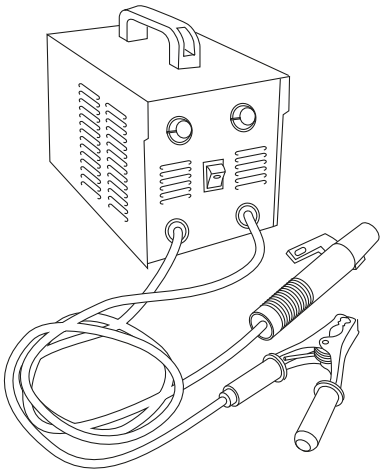

MIG WELDING

1.2 mm (0.045") Diameter Wire

- Standard Wire: AWS ER-70S-6
  1.2 mm (0.045") diameter
- Optional Wire: AWS ER-70S-3
  1.2 mm (0.045") diameter
- Volts: 26 - 30 DCRP
- Current: 275 - 325 Amps
- Wire Feed Speed: 9.6 to 10.7 m/min (380 to 420 i/min)
- Electrode Extension: 19 – 25 mm
- Gas: 86 percent argon and 14 percent CO2 at 0.85 to 1.0 metre^3/hour (30 to 35 CFH)

0.9 mm (0.035") Diameter Wire

- Standard Wire: ER80S-D2
  0.9 mm (0.035") diameter
- Volts: 25 – 27.5 DCRP
- Current: 160 - 180 Amps
- Wire Feed Speed: 9.9 – 10.8 mm/min (390 – 425 IPM)
- Electrode Extension: 19 – 25 mm
- Gas: 85 percent Argon and 15 percent CO2 at 1.0 to 1.3 metre^3/hour (35 to 45 CFH)

NOTE: Any deviation from these welding parameters must be approved in writing by Hendrickson Commercial Vehicle Systems Australia.

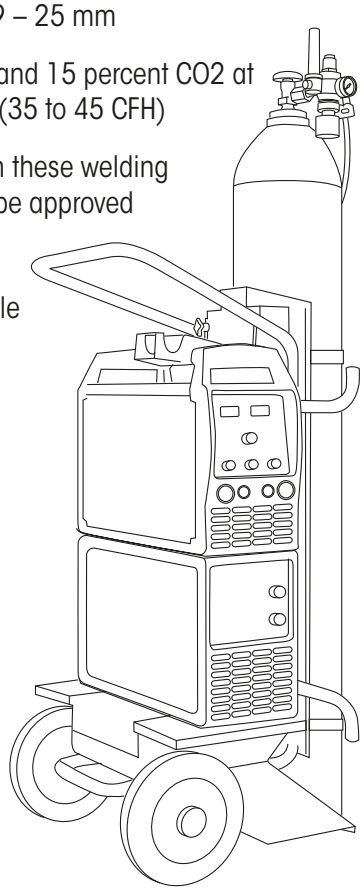

AANT UBL™ INSTALLATION

Lift bracket installation involves preparing the beam by surface cleaning, filling in the bracket slot and thoroughly welding with 3 passes around the large lift bracket slot.

Brake chambers, if already mounted, must be removed before installing lift kit.

Prepare the Under Beam Lift™ (UBL™) kit components, trailing arms and frame brackets for welding. The items to be welded must be a minimum temperature of 16° C and free of moisture, dirt, rust, scale, paint and grease.

The bolt-on front bracket assembly can be used in conjunction with a bolt-on lateral brace. If this is necessary, use the front mounting bolt for attaching both UBL bracket and lateral brace. For lateral braces other than those supplied by Hendrickson, care must be taken not to obstruct the front mounting hole.

⚠**WARNING** To prevent serious eye injury, always wear safety glasses when performing installation procedures.

IMPORTANT The UBL-401 kit cannot be paired with some brake chambers. This is due to insufficient clearance that restricts correct movement. The TSE UltraLife 30/30 3″ stroke brake chamber is known to interfere. However, other similar sized long stroke brake chambers may also cause obstruction.

IMPORTANT The UBL can only be installed with the suspension removed from the trailer.

IMPORTANT The suspension must be removed from the frame hangers because excessive heat will damage the QUIK-ALIGN™ pivot bush.

IMPORTANT The suspension must be inverted to allow the welds to be applied in the downward position.

IMPORTANT AANT axle spacing must be at least 1100 mm to allow for axle movement into the raised position.

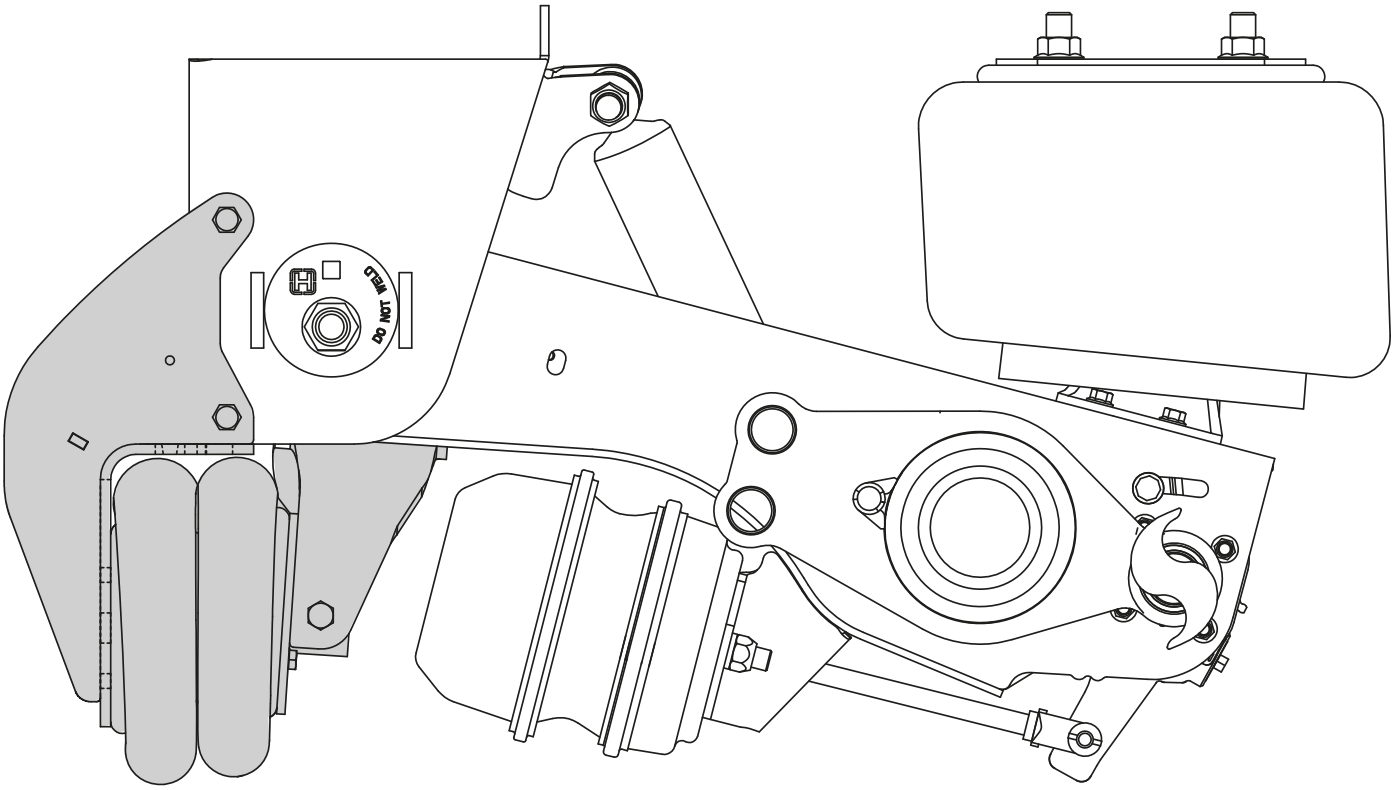

AANT Under Beam Lift Kit Installed

LIFT BRACKET INSTALLATION

1. **Preparing the beam surface.** Remove paint from underside of trailing arm beam as indicated by the area shown in the diagram.

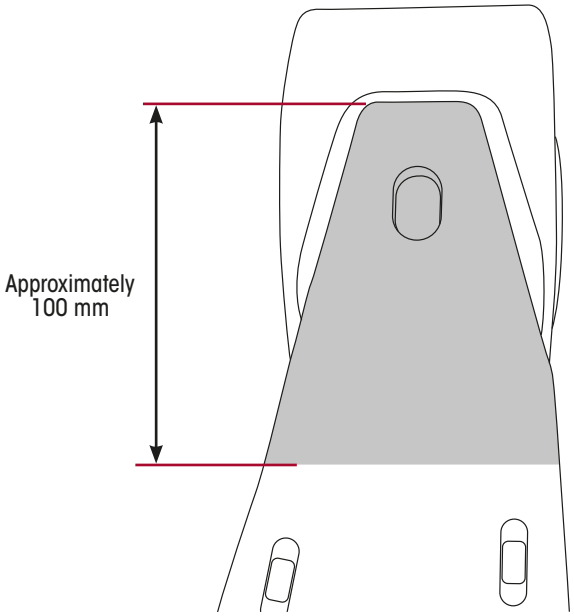

Prepare Beam Surface

2. **Marking the centreline.** Mark or scribe a line through the centre of the small oval slot on the underside of the trailing arm beam, as shown in the diagram. The line should be at around 125 mm in length and parallel to the outboard side of the beam. When correctly positioned it will be approximately 24 mm away from the outboard locating slot.

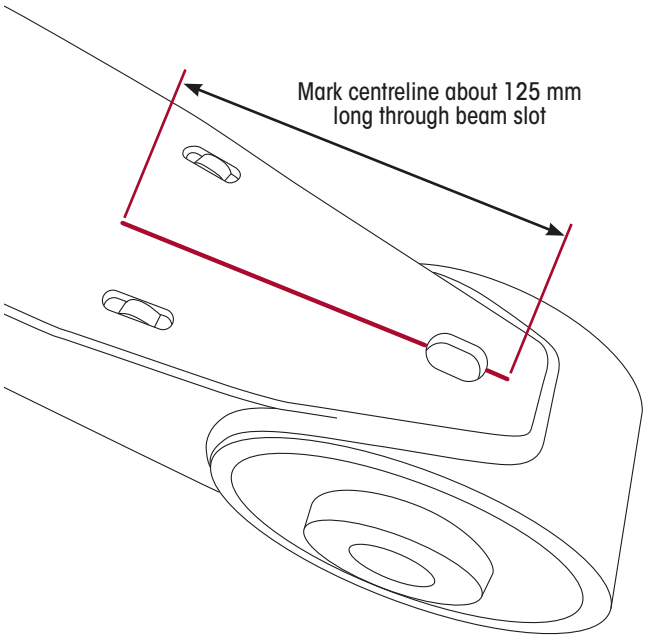

Mark Centreline

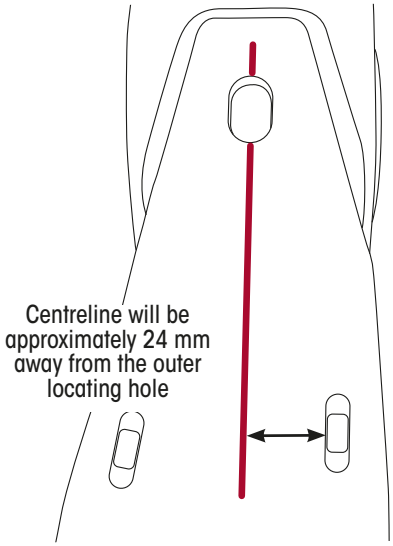

Centreline Location

3. **Positioning the lift bracket.** Set the lift bracket in position onto the underside of the beam by aligning the tab at the rear of the lift bracket against the marked line. (C-28617-1 for Left Hand and C-28617-2 for Right Hand) Make sure the bracket slot is parallel to the marked line, and front of the bracket slot lines up with the front of the beam slot. See diagram.

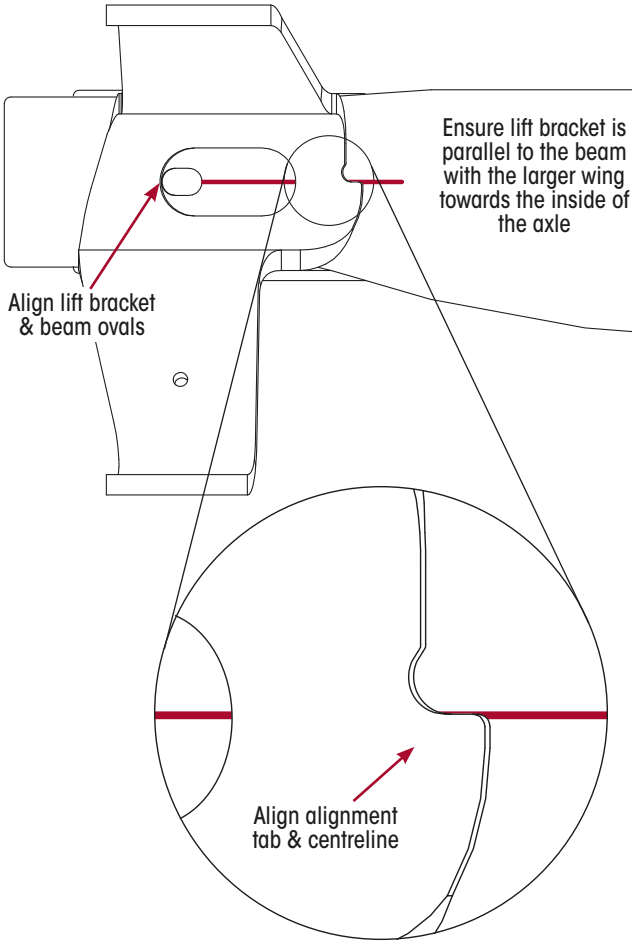

Positioning The Lift Bracket

4. **Tack welding.** Tack the lift bracket into place.

5. **Filling the small slot.** Completely fill the small slot on the underside of the beam before continuing with the UBL bracket weld.

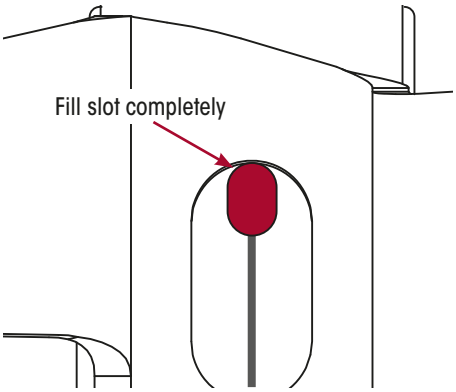

Fill Small Slot With Weld

6. **Welding the UBL bracket.** Complete attachment of the lift bracket by welding the large oval slot in the bracket to the beam. This must be a 3-pass weld. All three passes must be uninterrupted around the front of the slot, as shown in the diagram. No welding is needed outside of the slot area.

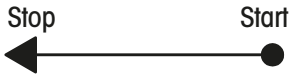

Weld Start and Stop

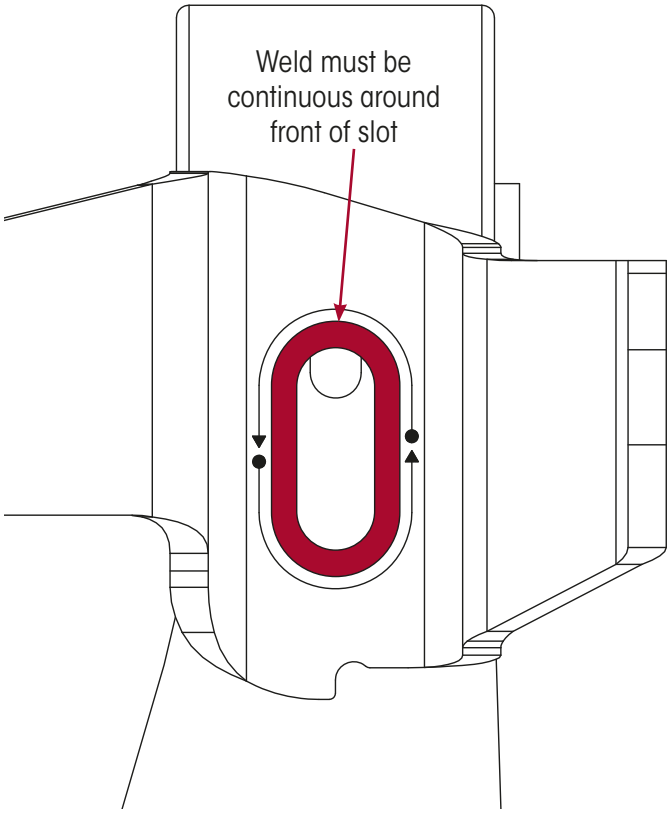

Start & Stop of Weld Passes

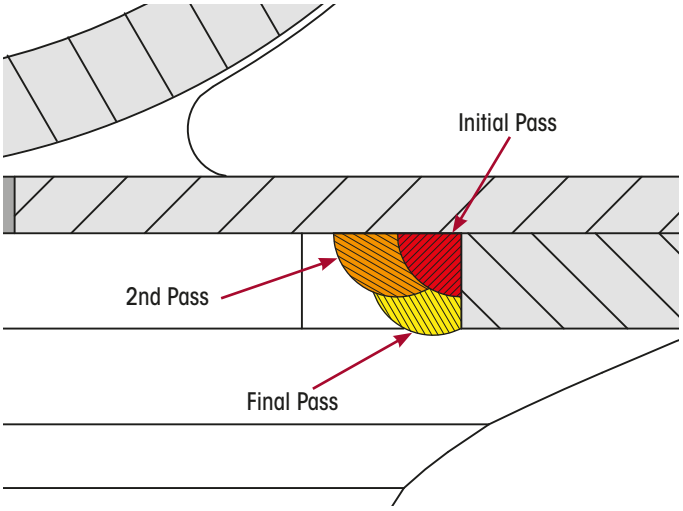

Weld Cross-Section

7. **Assembling air spring mounting plate.** Install the rear bracket assembly using the four 1/2"-13 x 1.25" hex bolts and 1/2"-13 nuts that are included in the kit.

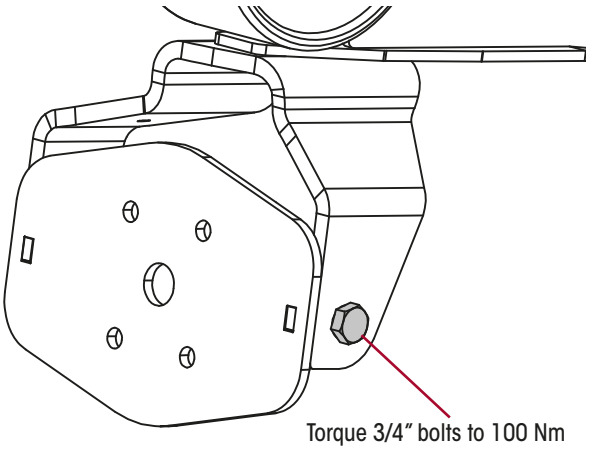

Install Mounting Plate Bolts & Tighten

8. **Tighten Bolts.** Tighten mounting bolts to the 100 Nm torque.

FRONT BRACKET ASSEMBLY PROCEDURE

NOTE: The front bracket must be in place before seating the ribbed-neck bolts. The bracket cannot be installed with the bolts in position.

1. **Fitting bracket into place.** Slide the front bracket into place, making sure that all the mounting holes in UBL bracket align with the holes in the frame bracket.

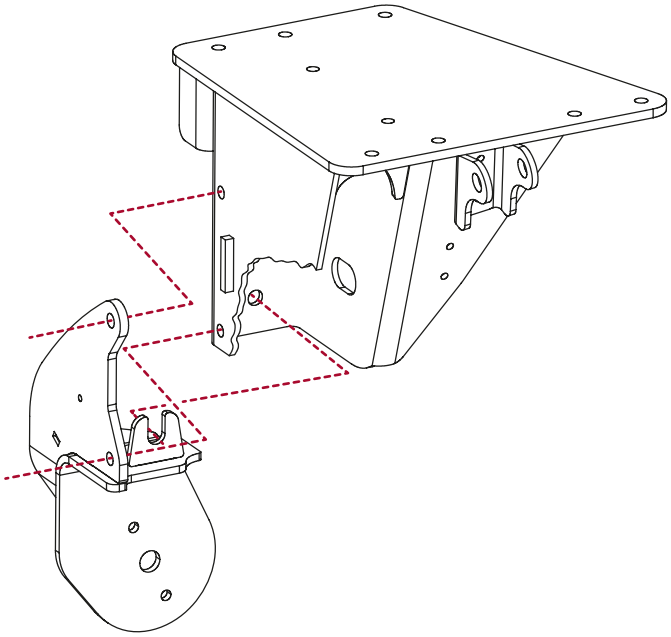

Slide Bracket Into Place

2. **Inserting side mounting bolts.** Holding the front bracket in place, push the ribbed neck fasteners into the mounting holes from inside of the frame bracket. Place the 1/2"-13 standard (non-locking) hex nut onto one of the ribbed-neck fasteners. Tighten to draw the bolt into the frame bracket mounting hole until the head of the fastener is flush with the inside of the hanger. Remove nut and repeat for the other rib necked bolts.

NOTE: Do not use prevailing torque nuts to seat the ribbed-neck bolts. The prevailing torque nuts should only be used for final assembly.

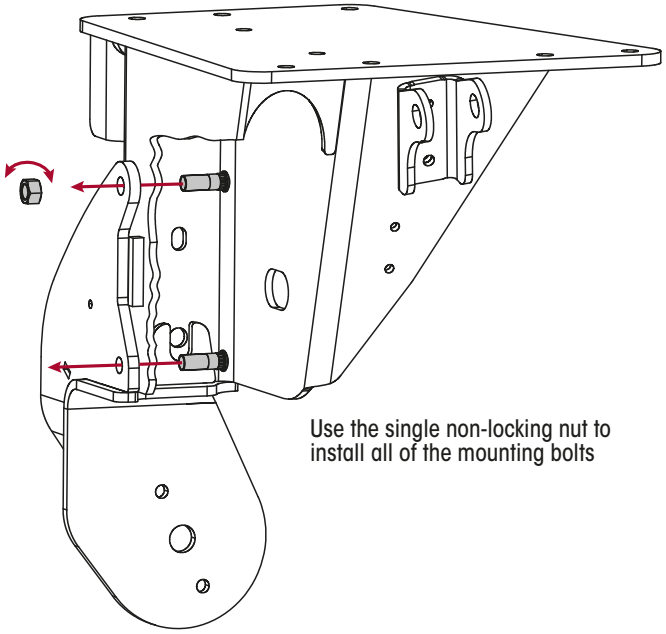

Insert & Secure Mounting Bolts

3. **Tightening side mounting bolts.** Remove the standard nut and place the 1/2"-13 prevailing torque nuts onto the ribbed-neck fasteners and torque to 110 Nm torque.

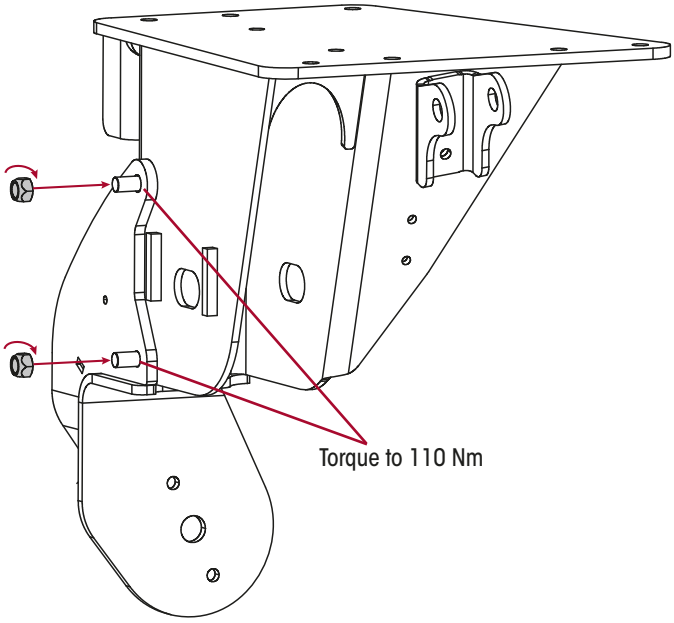

Tighten Mounting Nuts

4. **Installing front mounting bolt.** Place the 5/8″-11 x 1.5″ carriage bolt through front mounting hole, with the bolt head on the inside of the frame bracket (nearest the pivot bush). Hold the bolt in the hole and fit the 5/8″-11 prevailing torque hex nut onto bolt. Tighten to 280 Nm torque.

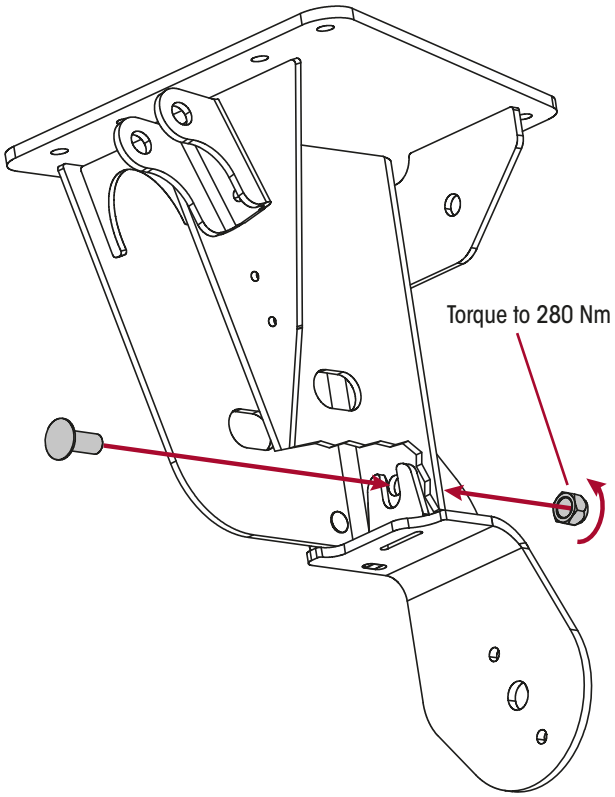

Install Front Mounting Bolt

5. **Air spring assembly.** Assemble the air spring with the air inlet facing either to the front or rear, depending on air line orientation requirements. Tighten the 3/4″-16 flange nut to 70 Nm torque and the 3/8″-16 x 0.88″ bolts to 45 Nm torque.

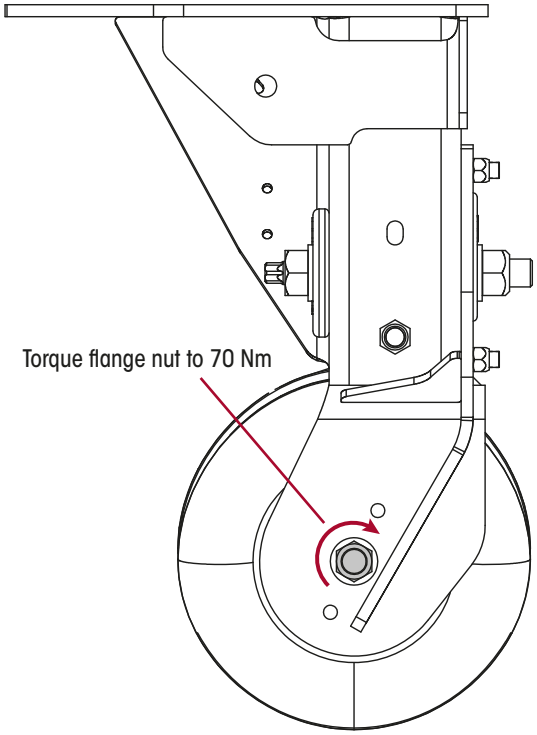

Air Fitting At Front Installation

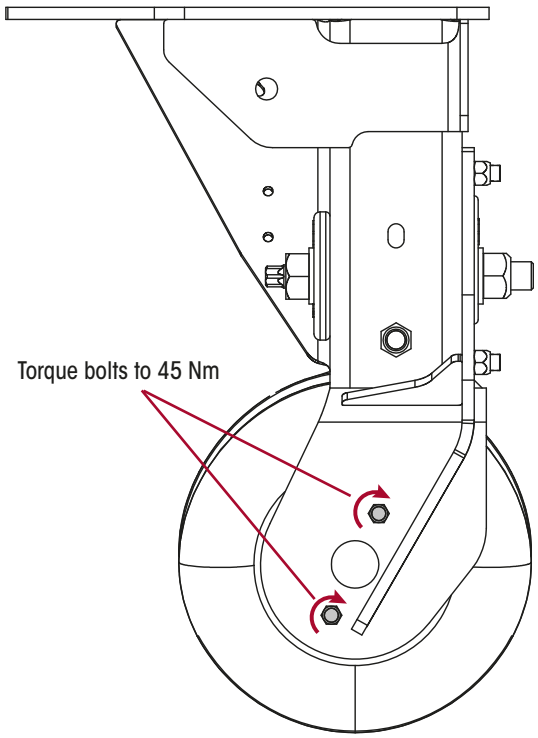

Air Fitting At Rear Alternate Installation

FRAME BRACKET WITHOUT MOUNTING HOLES

The following modifications are necessary if the frame brackets are not equipped with mounting holes.

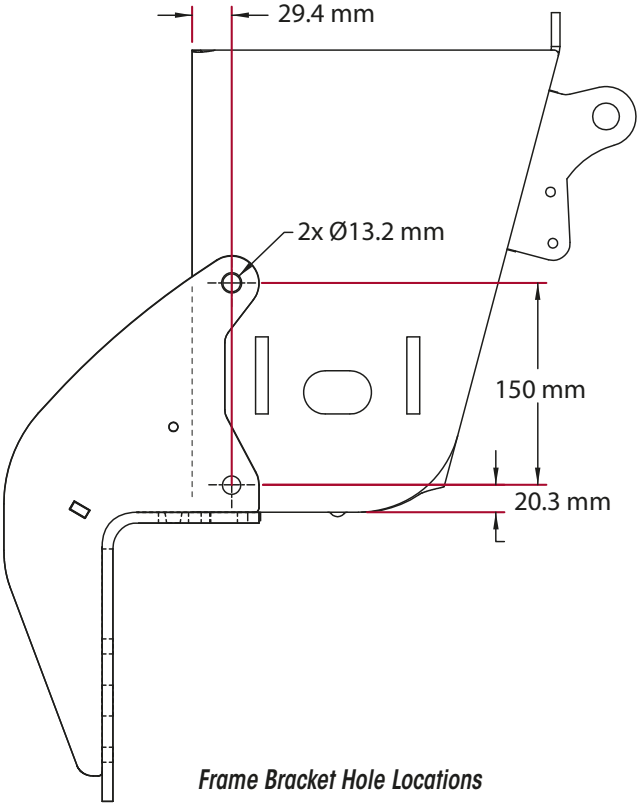

Frame Bracket Hole Locations

Initial

Position the front lift bracket onto suspension frame bracket.

Outboard holes

1. Using a suitable size transfer punch, centre punch marks to locate the centre of the front lift bracket holes onto the outboard side of the suspension frame bracket.
2. Drill suitably sized pilot holes.
3. Finish drilling the holes using a 13 mm (33/64”) drill bit.

Front hole

1. Centre punch at the centre of the bracket front holes.
2. Drill suitably sized pilot holes.
3. Finish drilling using a 16 mm (41/64”) drill bit.

Finish

If the frame brackets have been galvanized, the surface of the drilled holes will need to be suitably re-coated.

AANT UBL™ TORQUE SPECIFICATIONS

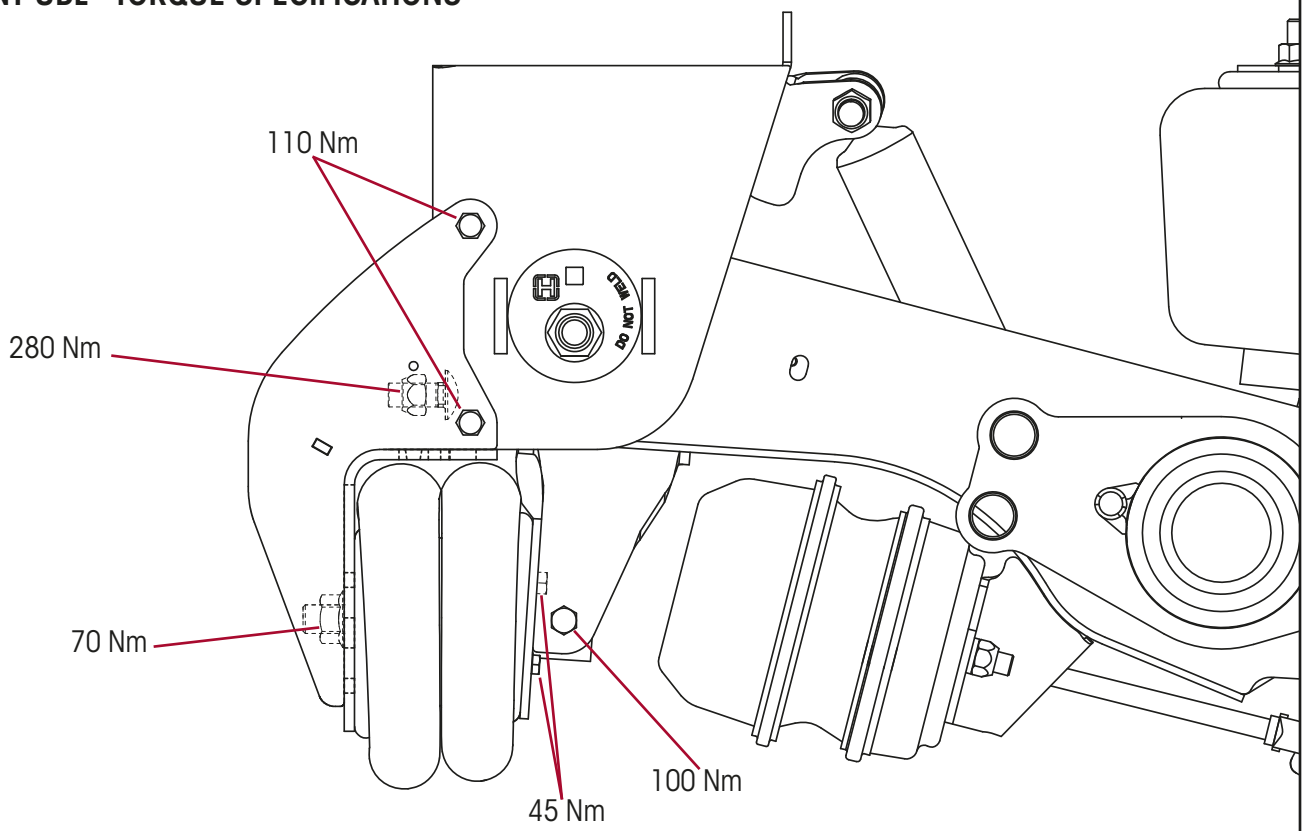

AANL UBL™ INSTALLATION

Lift bracket installation involves preparing the beam by surface cleaning and then securing bracket in place with welds along three edges.

Brake chambers, if already mounted, must be removed before installing lift kit.

Prepare the Under Beam Lift™ (UBL™) components, trailing arms and frame brackets for welding. The items to be welded must be a minimum temperature of 16° C and free of moisture, dirt, rust, scale, paint and grease.

The bolt-on front bracket assembly can be used in conjunction with a bolt-on lateral brace. If this is necessary, use the front mounting bolt for attaching both UBL bracket and lateral brace. For lateral braces other than those supplied by Hendrickson, care must be taken not to obstruct the front mounting hole.

⚠**WARNING**: To prevent serious eye injury, always wear safety glasses when performing installation procedures.

IMPORTANT: The UBL can only be installed with the suspension removed from the trailer.

IMPORTANT: The suspension must be removed from the frame hangers because excessive heat will damage the QUIK-ALIGN™ pivot bush.

IMPORTANT: The suspension must be inverted to allow the welds to be applied in the downward position.

IMPORTANT: AANL axle spacing must be at least 1245 mm to allow for axle movement into the raised position.

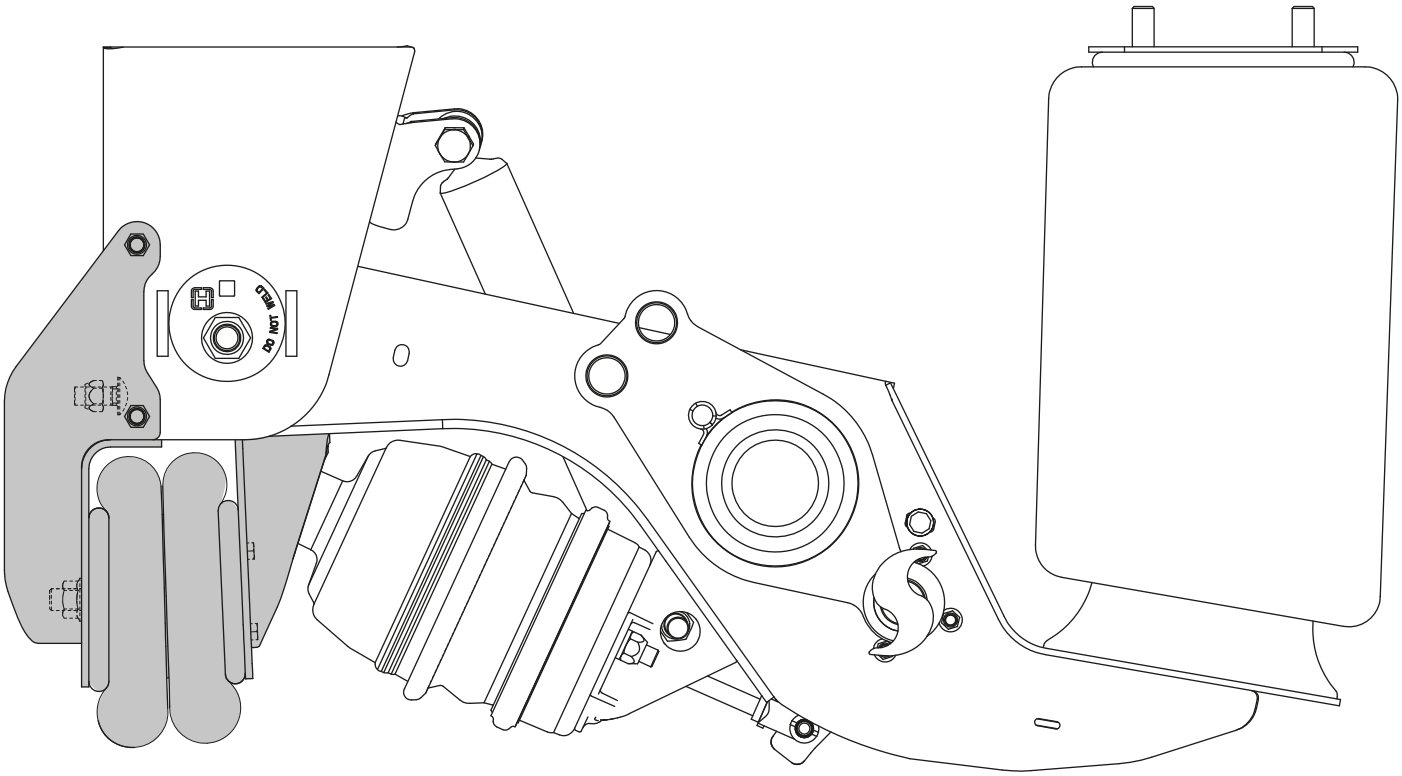

AANL Under Beam Lift Kit Installed

LIFT BRACKET INSTALLATION

1. **Preparing the beam surface.** Remove paint from underside of trailing arm beam as indicated by the area shown in the diagram.

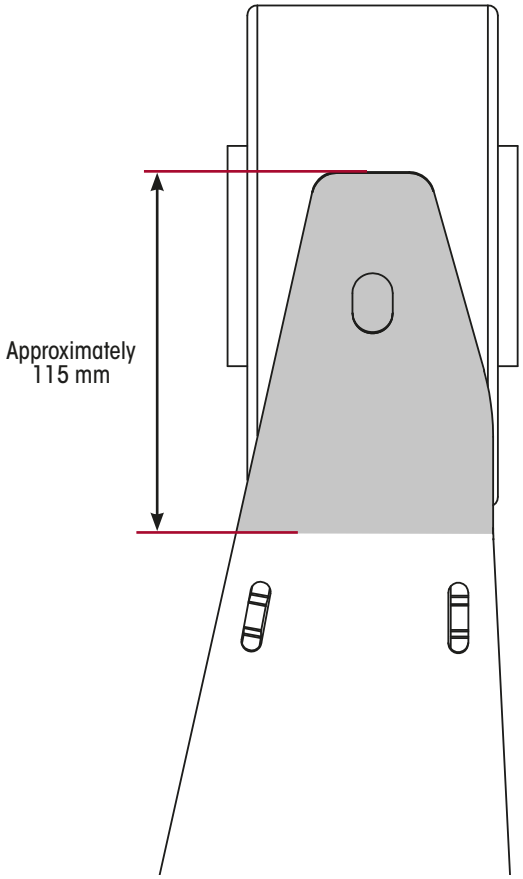

Prepare Beam Surface

2. **Positioning the lift bracket.** Locate rear lift bracket (C-30209-1C for Left Hand and C-30209-2C for Right Hand) to underside of beam, inserting tab on front of bracket into slot on beam. Align front tab to front of slot and rotate bracket to align rear tab with edge of beam plate. Refer to the diagrams.

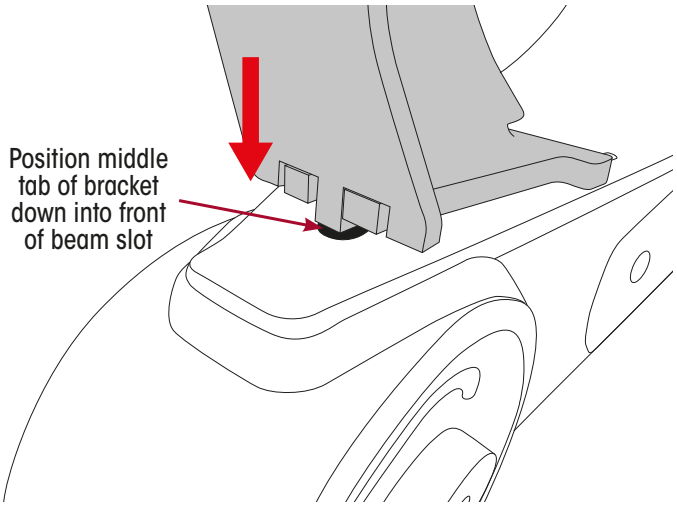

Positioning Lift Bracket

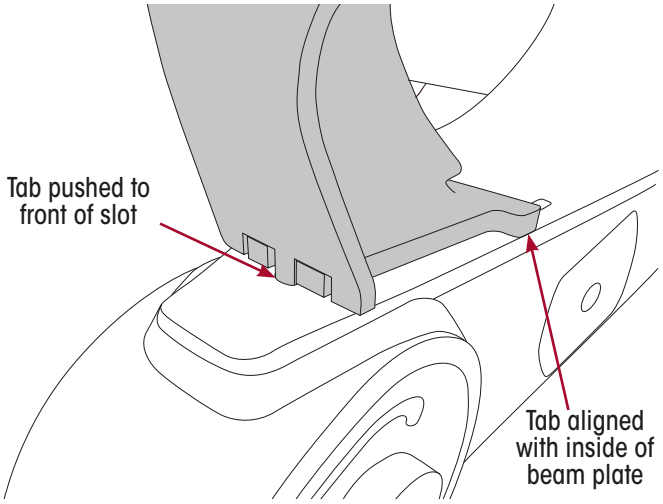

Lift Bracket In Correct Position

3. **Tack welding.** Tack the lift bracket into place.

4. **Welding the lift bracket.** Complete attachment of lift bracket by welding the front and both sides of the bracket to the beam as indicated in the diagrams. Be careful not to extend weld past edge of beam plate. No welding is required on the rear of the bracket.

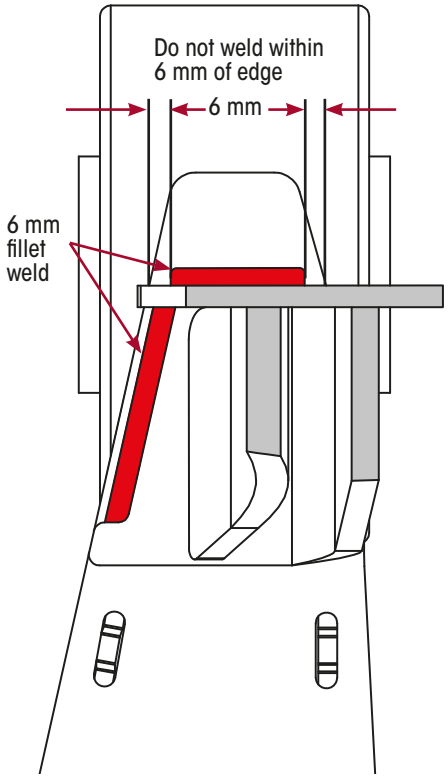

Front and Inside Weld Specification

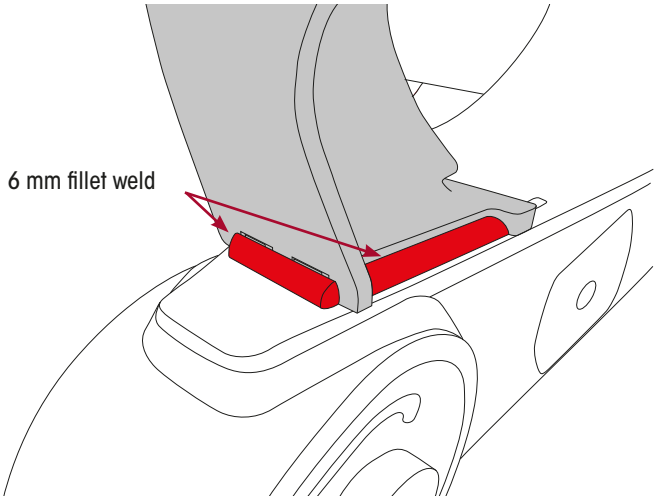

Front and Inside Weld Location

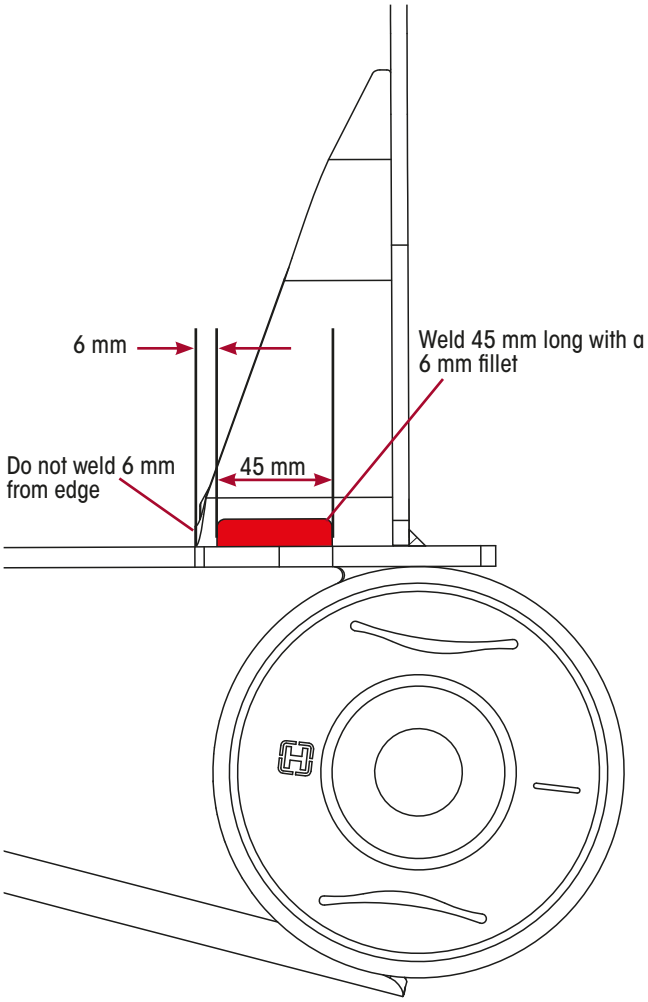

Outside Weld Specification

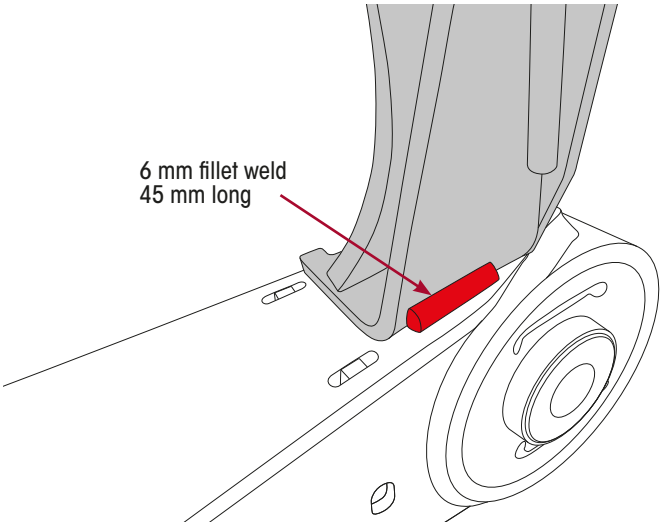

Outside Weld Location

FRONT BRACKET ASSEMBLY PROCEDURE

NOTE: The front bracket must be in place before seating the ribbed-neck bolts. The bracket cannot be installed with the bolts in position.

1. **Fitting bracket into place.** Slide front bracket into place, making sure that both mounting holes in UBL bracket align with holes in frame bracket. The top of the air spring plate should be in contact with the bottom of the frame bracket.

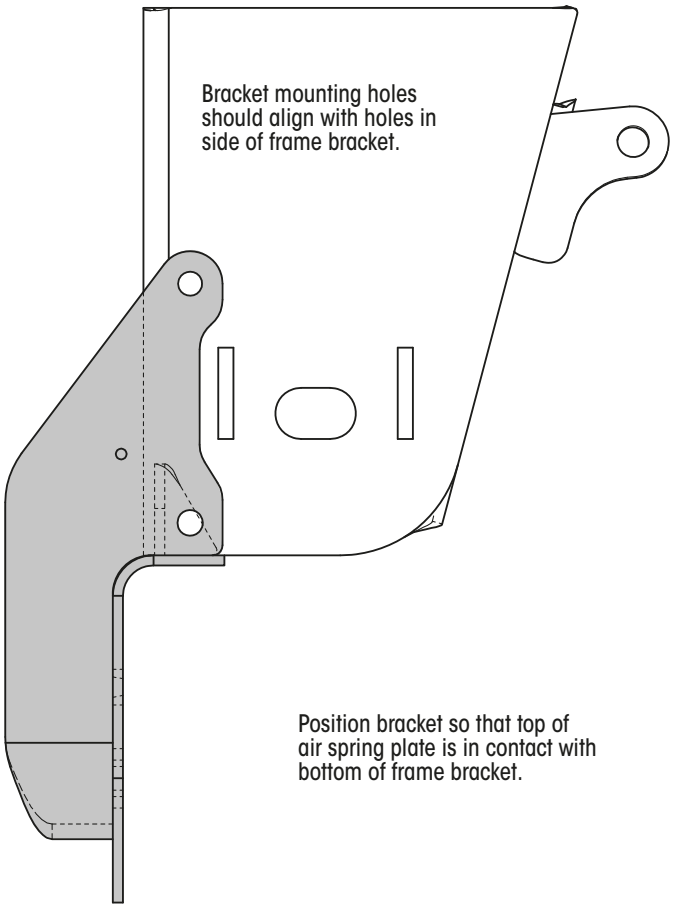

Slide Bracket Into Place

2. **Inserting side mounting bolts.** Holding the front bracket in place, push the ribbed neck fasteners into the mounting holes from inside of the frame bracket. Place the 1/2"-13 standard (non-locking) hex nut onto one of the ribbed-neck fasteners. Tighten to draw the bolt into the frame bracket mounting hole until the head of the fastener is flush with the inside of the hanger. Remove nut and repeat for the other rib necked bolts.

NOTE: Do not use prevailing torque nuts to seat the ribbed-neck bolts. The prevailing torque nuts should only be used for final assembly.

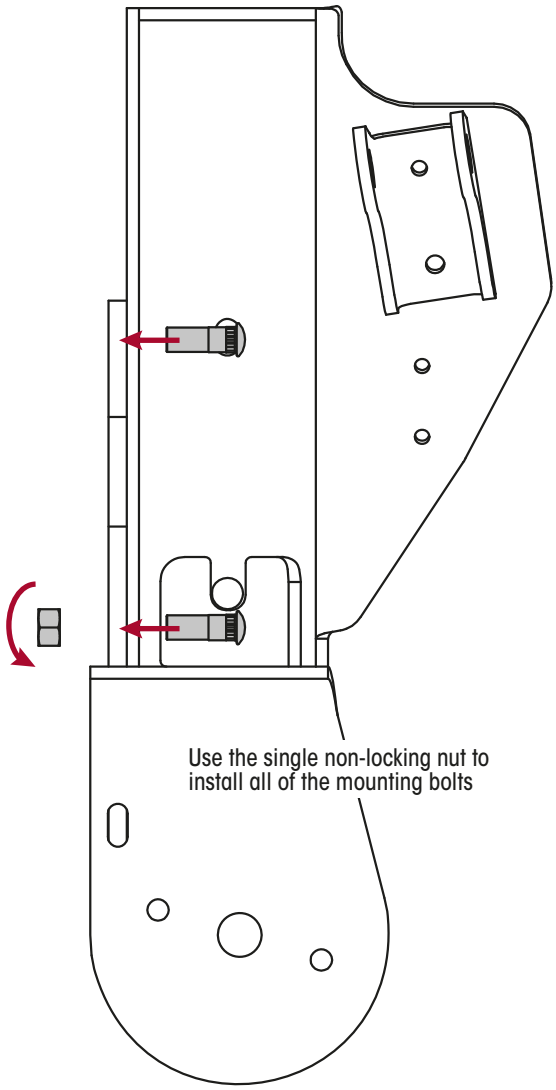

Insert & Secure Mounting Bolts

3. **Tightening side mounting bolts.** Remove the standard

nut and place the 1/2″-13 prevailing torque nuts onto the ribbed-neck fasteners and torque to 110 Nm.

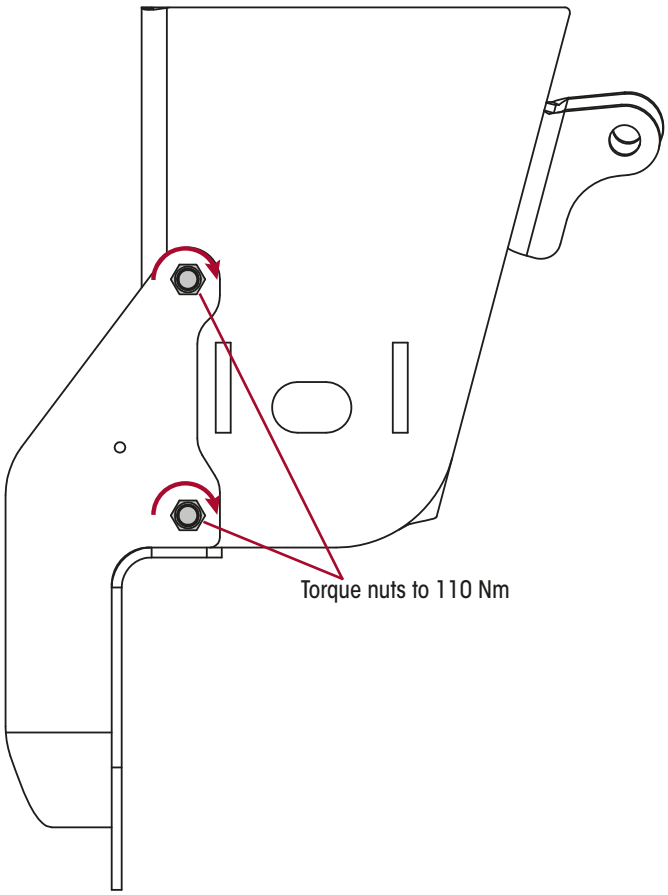

Tighten Mounting Nuts

4. **Installing front mounting bolt.** Place the 5/8″-11 x 1.5″ carriage bolt through front mounting hole, with the bolt head on the inside of the frame bracket (nearest the pivot bush). Hold the bolt in the hole and fit the 5/8″-11 prevailing torque hex nut onto bolt. Tighten to 280 Nm torque.

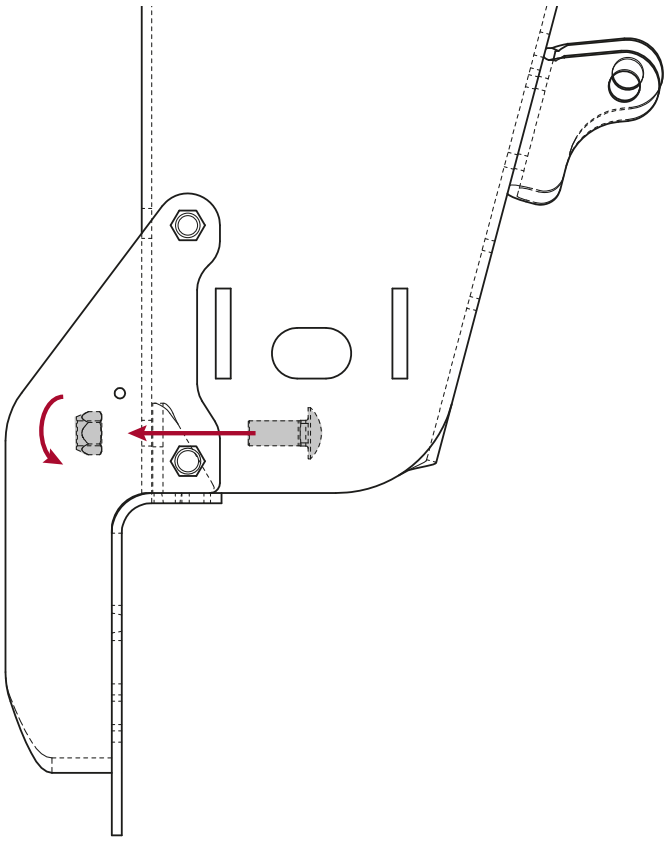

Install Front Mounting Bolt

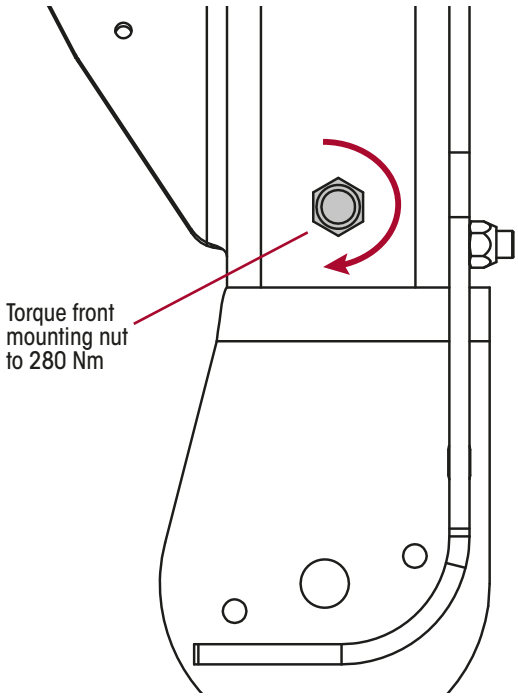

Torque Front Mounting Nut

5. **Air spring assembly.** Assemble the air spring with the air inlet facing either to the front or rear, depending on air line orientation requirements. Tighten the 3/4″-16 flange nut to 70 Nm and the 3/8″-16 x 0.88″ bolts to 45 Nm torque.

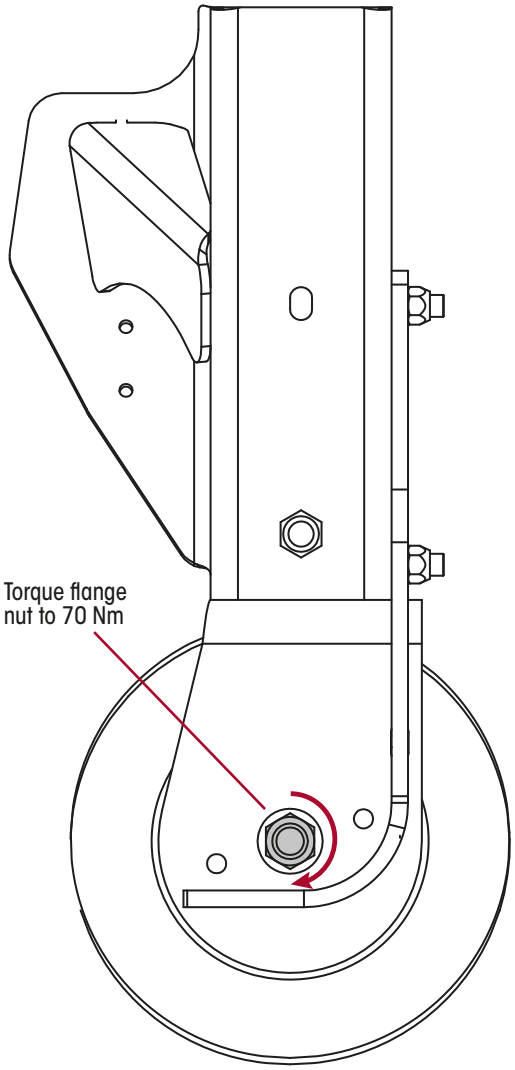

Air Fitting At Front Installation

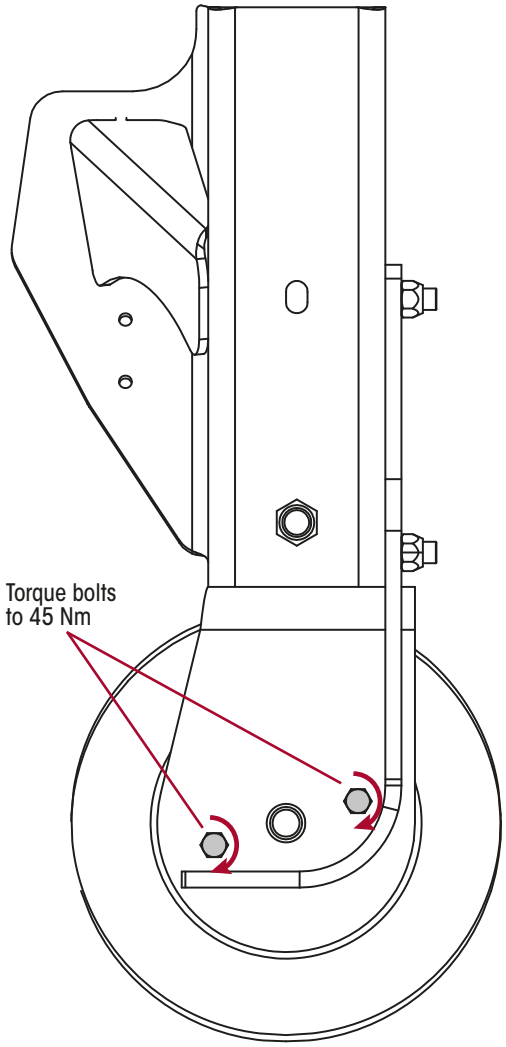

Air Fitting At Rear Alternate Installation

FRAME BRACKET WITHOUT MOUNTING HOLES

The following modifications are necessary if the frame brackets are not equipped with mounting holes.

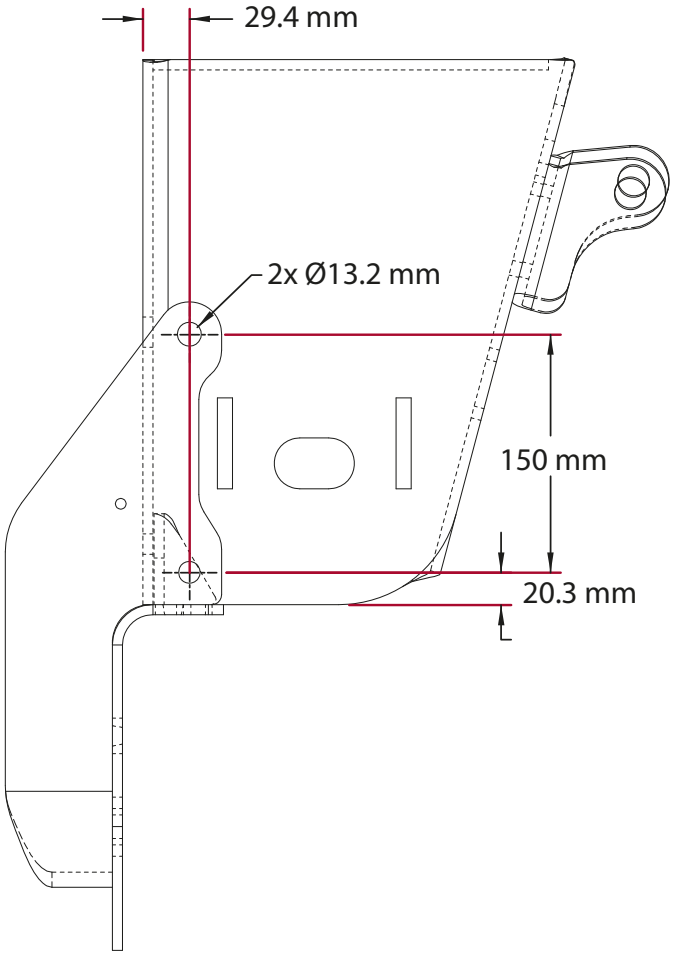

Frame Bracket Hole Locations

Initial

Position the front lift bracket onto suspension frame bracket.

Outboard holes

1. Using a suitable size transfer punch, centre punch marks to locate the centre of the front lift bracket holes onto the outboard side of the suspension frame bracket.
2. Drill suitably sized pilot holes.
3. Finish drilling the holes using a 13 mm (33/64”) drill bit.

Front hole

1. Centre punch at the centre of the bracket front holes.
2. Drill suitably sized pilot holes.
3. Finish drilling using a 16 mm (41/64”) drill bit.

Finish

If the frame brackets have been galvanized, the surface of the drilled holes will need to be suitably re-coated.

AANL UBL™ TORQUE SPECIFICATIONS

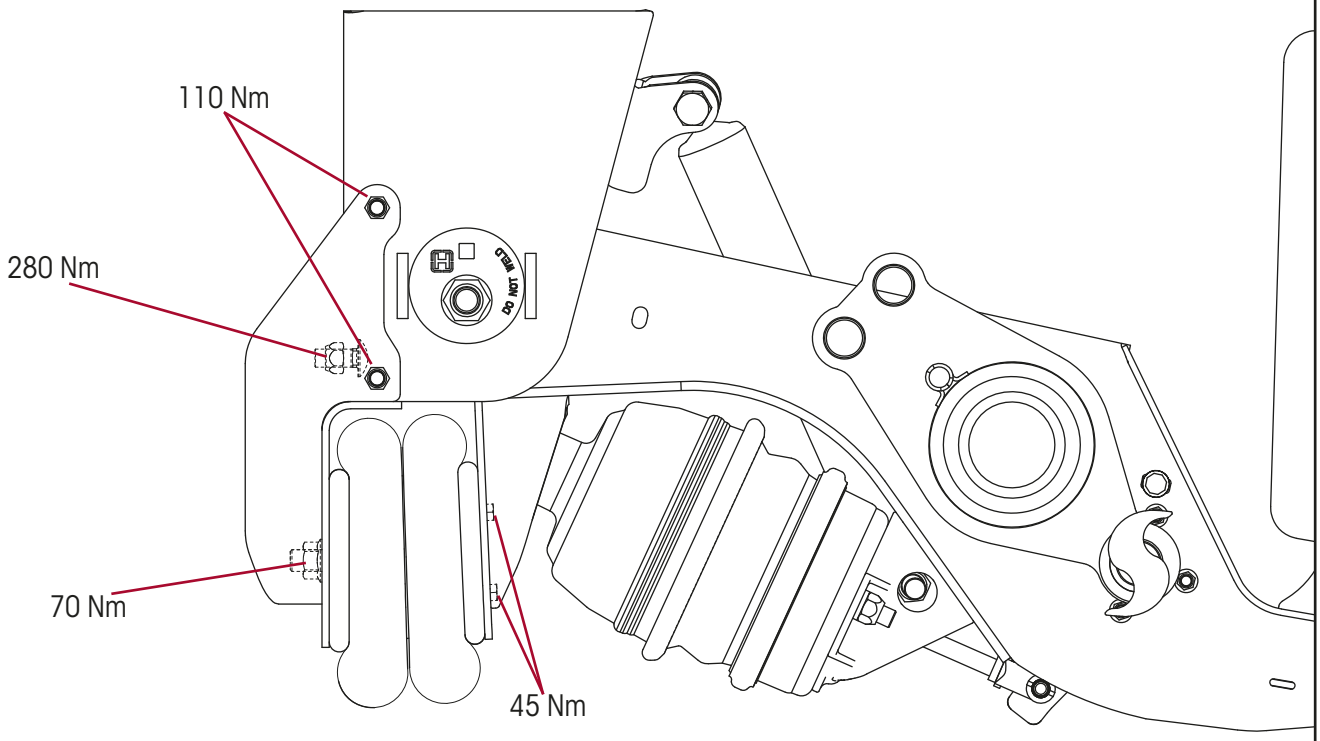

Revisions Table

DATE	REV	PAGE	DESCRIPTION
Aug 2018	A	All	New document to suit Australia, New Zealand and Asia Pacific market.

Actual product performance may vary depending upon vehicle configuration, operation, service and other factors.
All applications must comply with applicable Hendrickson specifications and must be approved by the respective vehicle manufacturer with the vehicle in its original, as-built configuration.
Contact Hendrickson for additional details regarding specifications, applications, capacities, and operation, service and maintenance instructions.

*Need Help? Australia Call **+61 3 8792 3600** or Email **customerservice@hendrickson.com.au***
*New Zealand Call **+64 9 570 4721** or Email **nz-customerservice@hendrickson.co.nz***

HENDRICKSON
www.hendrickson.com.au

HENDRICKSON ASIA PACIFIC PTY LTD
ABN 21 004 992 769
32- 44 Letcon Drive, P.O. Box 1063
Dandenong, Victoria, 3175
61.3.8792.3600 • Fax 61.3.8792.3699

HENDRICKSON NEW ZEALAND
Unit P, 24 Allright Place
Mt Wellington, Auckland, 1060
64.9.570.4721 • Fax 64.9.570.4816

97117-217 Rev A