PARTS LIST

AIRTEK® Front Air Suspension with STEERTEK™ NXT Axle for Thomas Built Buses Saf-T-Liner® HDX • eHDX Models

LIT NO: SP-352
DATE: April 2026 **REVISION:** D

CONTENTS

DESCRIPTION **PAGE**

Parts Lists – AIRTEK with STEERTEK NXT Axle

- HDX2 • HDX2 with Relay Arm Models 2
- HDX • HDX with Relay Arm Models 2
- eHDX2 Wattson Models 4

Special Tools 6

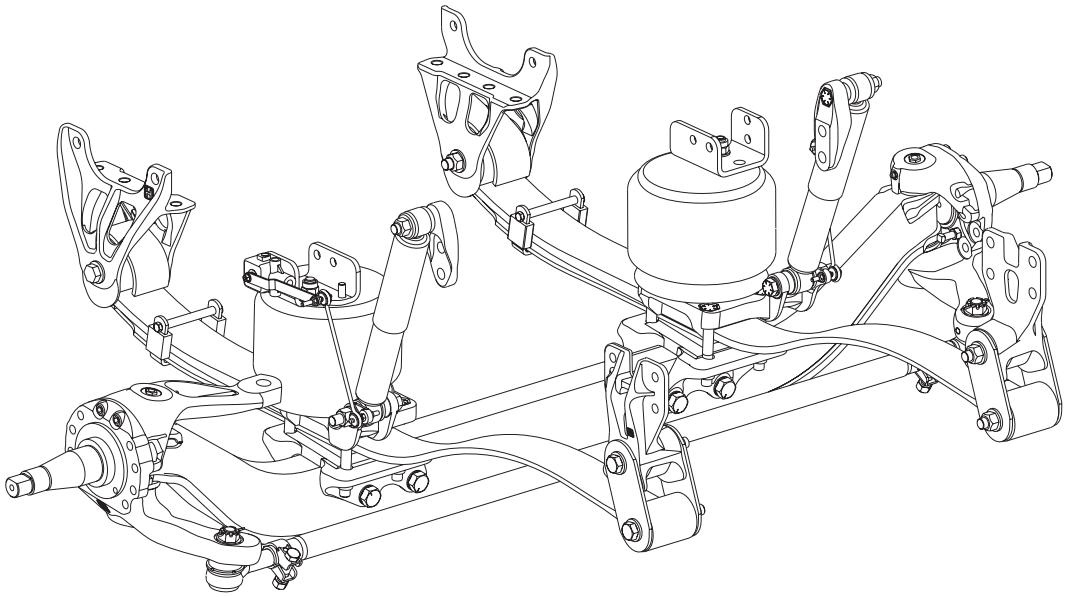

HENDRICKSON
The World Rides On Us®

AIRTEK® with STEERTEK™ NXT axle

14.7K Pound Capacity

HDX2 • HDX2 with Relay Arm Models, Vehicles built after July 2024
HDX • HDX with Relay Arm Models, Vehicles built prior to July 2024

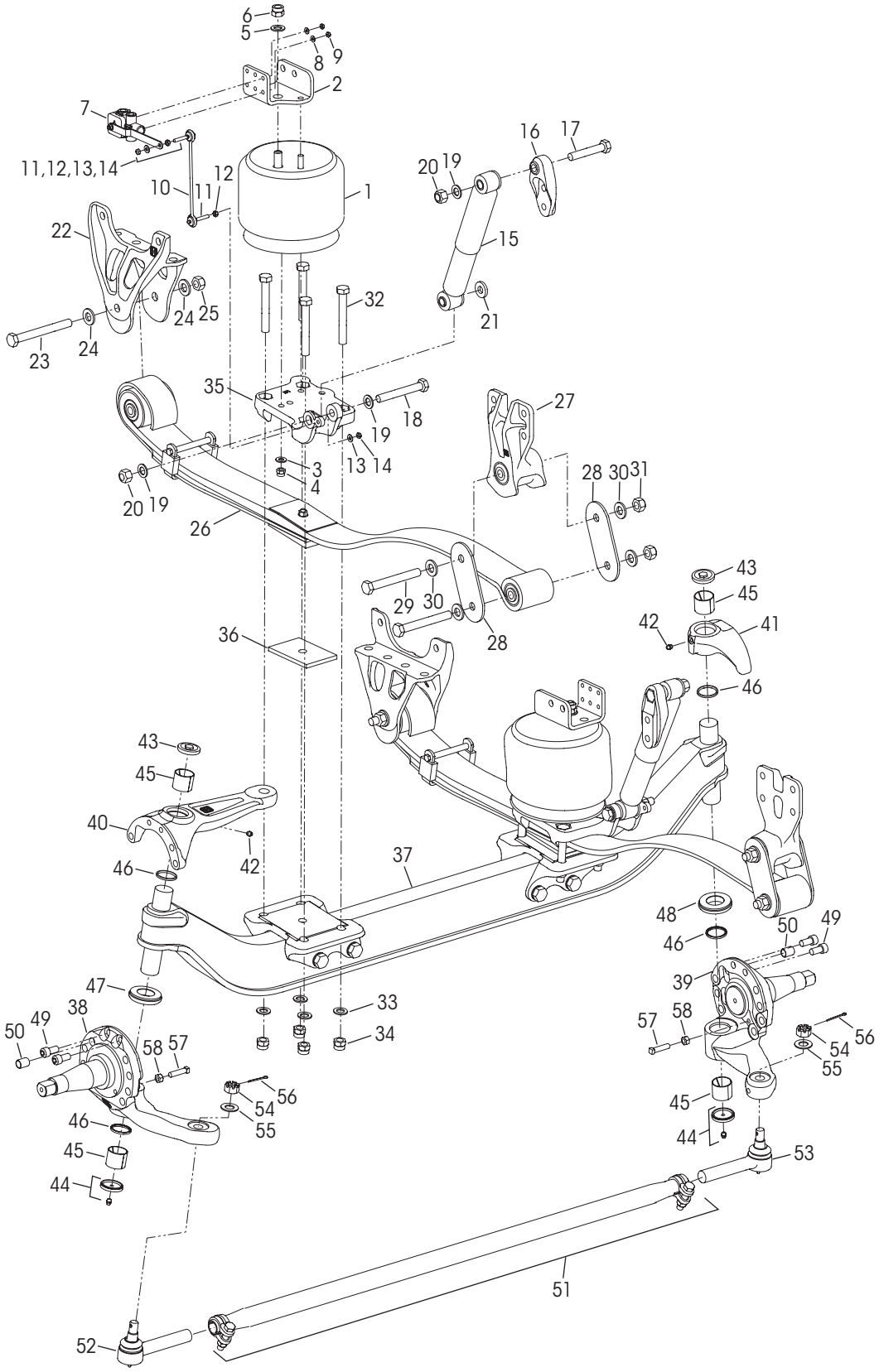

KEY NO.	PART NO.	DESCRIPTION	VEHICLE QTY.
1	66865-002	Air Spring	2
2	66807-002	Upper Air Spring Bracket	2
3	22962-011	½" Flat Washer	2
4	66807-002	½"-13 UNC Nylon Locknut	2
5	22962-001	*¾" Hardened Washer	2
6	17700-035	*¾"-16 UNF Nylon Locknut	2
	59013-001	Height Control Valve Assembly, Includes Key Nos.7-9	2
7	60501-001	Height Control Valve	1
8		*¼" Hardened Washer	2
9		*¼"-20 UNC Locknut	2
	66825-001	Linkage Assembly, Includes Key Nos. 10-14	
10	59428-005	Linkage	1
11		*5/16"-18 UNC Stud - 2.44"	2
12		*5/16"-18 UNC Hex Nut	2
13		*5/16" Hardened Washer	2
14		*5/16"-18 UNC Locknut	2
15	58913-013L	Shock Absorber	2
16	67463-002	Upper Shock Bracket	2
17	50764-010	¾"-10 UNC x 4¼" Upper Shock Bolt	2
18	58917-003	¾"-10 UNC x 5½" Lower Shock Bolt	2
19	22962-001	¾" Hardened Washer	6
20	49842-000	¾"-10 UNC Locknut	4
21	59946-013	Shock Spacer	2
22	64488-002	Front Hanger	2
	34013-495	**Leaf Spring Eye Fastener Service Kit, One side,** Includes Key Nos. 23-25, 29-31	
23		*M20 Hex Bolt - 180 mm	2
24		*M20 Hardened Washer	4
25		*M20 Locknut	2
	60961-163	**Leaf Spring Assembly Service Kit, Axle Set,** Includes Key Nos. 26-28	
26	53487-000	Leaf Spring Assembly	2
	60961-643	**Rear Shackle Service Kit, Axle Set,** Includes Key Nos. 27-28	
27	66510-001	Rear Shackle Bracket with Bushing	2
28	64314-000	Rear Shackle Plate	4
29		*M20 x 160 mm Hex Bolt	4
30		*M20 Hardened Washer	8
31		*M20 Locknut	4
		Clamp Group Service Kit	
	60961-675	HDX, Includes Key Nos. 32a, 33-34	
	60961-673	HDX w/Relay Arm, Includes Key Nos. 32b, 33-34	
32		*¾"-16 UNF Hex Bolt	8
a		HDX, 5½" Long	
b		HDX w/Relay Arm, 5" Long	
33		*¾" Flat Washer	8
34		*¾"-16 UNF 2B Nylon Locknut	8
35		Top Pad	
	66814-001	Left Hand	1
	66814-002	Right Hand	1
36	70105-010	Front Axle Spacer, 10 mm Thickness	2

KEY NO.	PART NO.	DESCRIPTION	VEHICLE QTY.
		STEERTEK NXT Axle Assembly	1
		⅝" Brake Fasteners, Includes Key Nos. 37-56	
	93577-001	HDX	
	93577-002	HDX w/Relay Arm	
37	68986-002M	Axle & Kingpin Assembly	1
		Lower Steering Knuckle Assembly, ⅝" Brake Fasteners, Includes Key Nos. 44-46, 50, 57-58	1
38	58900-233	Left Hand	
39	58900-234	Right Hand	
		Upper Steering Knuckle Assembly, ⅝" Brake Fasteners, Includes Key Nos. 42-43, 45-46	1
40	60903-274	HDX, Left Hand	
	60903-285	HDX w/Relay Arm, Left Hand	
41	60904-232	Right Hand	
		Kingpin Bushing and Bearing Service Kits	
	60961-628	**Axle Set,** Includes Kit Nos. 60961-629 & -630	
	60961-629	**Left Hand with Composite Thrust Bearing,** Includes Key Nos. 42-47, 49 & Loctite	
	60961-630	**Right Hand with Roller Thrust Bearing,** Includes Key Nos. 42-46, 48-49 & Loctite	
42	33117-000	Grease Zerk	2
43	68687-003	Grease Cap Assembly, Upper	2
44	68687-002	Grease Cap Assembly, Lower	2
45	58909-001	Kingpin Bushing	4
		Thrust Bearing Service Kits	
	60961-631	**Axle Set,** Includes Kit Nos. 60961-632 & -633	
	60961-632	**Left Hand Composite Thrust Bearing,** Includes Key Nos. 46-47, 49 & Loctite	
	60961-633	**Right Hand Roller Thrust Bearing,** Includes Key Nos. 46, 48-49 & Loctite	
46	68731-000	Kingpin Seal	4
47	59828-000	Left Hand Composite Thrust Bearing	1
48	64256-000L	Right Hand Roller Thrust Bearing	1
49	60236-001	⅝" Socket Head Cap Screw	4
Not Shown	60937-000	Loctite® (Red) Compound Tube	1
50	64246-000	ABS Sensor Sleeve	2
51	76879-002	Tie Rod Assembly, Includes Key Nos. 52-54	1
		Tie Rod End Service Kits	
	60961-735	**Axle Set,** Includes LH and RH Kits	
	60961-742	**Left Hand,** Includes Key Nos. 52, 54-56	
	60961-743	**Right Hand,** Includes Key Nos. 53-56	
		*Tie Rod End, Includes Key No. 54	
52		Left Hand	1
53		Right Hand	1
54		*⅞" Castle Nut	2
55		*⅞" Flat Washer	2
56		*Tie Rod Nut Cotter Pin	2
	60961-069	**Stop Bolt Service Kit, One Side,** Includes Key Nos. 57-58	
57		*½"-13 UNC Square Head Bolt	2
58		*½"-13 UNC Hex Jam Nut	2

NOTES: Quantities specified are for the vehicle. Quantities of service kit components may vary from amount shown in list.

* Item included in kit / assembly only, part not sold separately.

AIRTEK® with STEERTEK™ NXT axle

14.7K Pound Capacity
eHDX2 Wattson Models

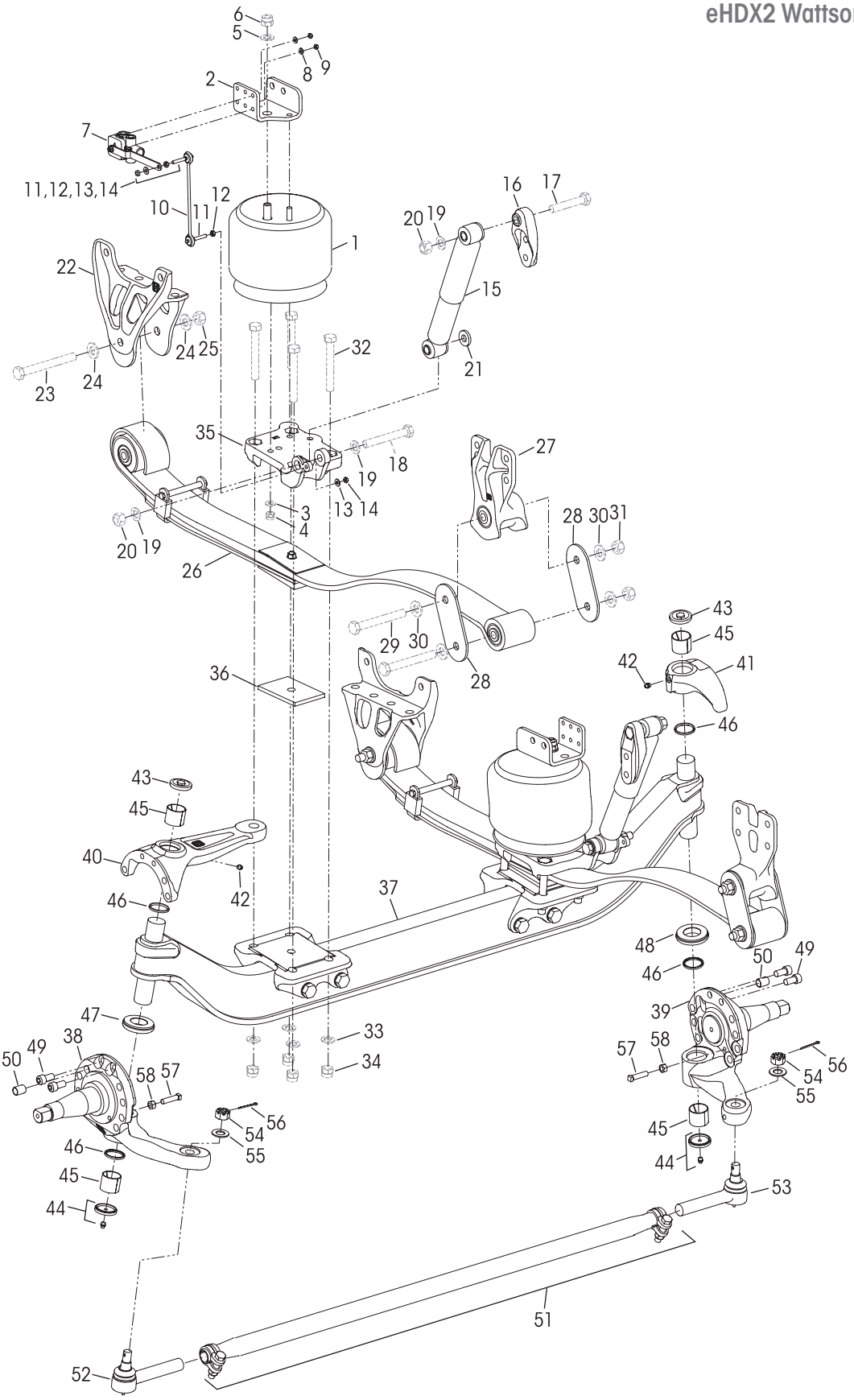

KEY NO.	PART NO.	DESCRIPTION	VEHICLE QTY.
1	66865-002	Air Spring	2
2	66807-002	Upper Air Spring Bracket	2
3		**½" Flat Washer	2
4		**½"-13 UNC Nylon Locknut	2
5		**¾" Hardened Washer	2
6		**¾"-16 UNF Nylon Locknut	2
	59013-001	Height Control Valve Assembly, Includes Key Nos.7-9	2
7	60501-001	Height Control Valve	1
8		*¼" Hardened Washer	2
9		*¼"-20 UNC Locknut	2
	66825-001	Linkage Assembly, Includes Key Nos. 10-14	
10	59428-005	Linkage	1
11		*5/16"-18 UNC Stud - 2.44"	2
12		*5/16"-18 UNC Hex Nut	2
13		*5/16" Hardened Washer	2
14		*5/16"-18 UNC Locknut	2
15	58913-013L	Shock Absorber	2
16	67463-002	Upper Shock Bracket	2
17		**¾"-10 UNC x 4¼" Upper Shock Bolt	2
18		**¾"-10 UNC x 5½" Lower Shock Bolt	2
19		**¾" Hardened Washer	6
20		**¾"-10 UNC Locknut	4
	93202-007	**Shock Spacer Service Kit, One side,** Includes Key No. 21	
21	59946-013	Shock Spacer	2
22	64488-002	Front Hanger	2
23		**¾"-10 UNC x 7" Hex Bolt	2
24		**¾" Hardened Washer	4
25		**¾-10 UNC Locknut	2
	60961-163	**Leaf Spring Assembly Service Kit, Axle Set,** Includes Key Nos. 26-28	
26	53487-000	Leaf Spring Assembly	2
	60961-643	**Rear Shackle Service Kit, Axle Set,** Includes Key Nos. 27-28	
27	66510-001	Rear Shackle Bracket with Bushing	2
28	64314-000	Rear Shackle Plate	4
29		**¾"-10 UNC x 6.5" Hex Bolt	4
30		**¾" Hardened Washer	8
31		**¾-10 UNC Locknut	4
32		**¾"-16 UNF x 5" Hex Bolt	8
33		**¾" Flat Washer	8
34		**¾"-16 UNF 2B Nylon Locknut	8
35		Top Pad	
	66814-001	Left Hand	1
	66814-002	Right Hand	1
36	70105-010	Front Axle Spacer, 10 mm Thickness	2

KEY NO.	PART NO.	DESCRIPTION	VEHICLE QTY.
	93577-003	**STEERTEK NXT** Axle Assembly, eHDX ¾" Brake Fasteners, Includes Key Nos. 37-56	1
37	68986-002M	Axle & Kingpin Assembly	1
		Lower Steering Knuckle Assembly, eHDX, ¾" Brake Fasteners, Includes Key Nos. 44-46, 50, 57-58	1
38	58900-433	Left Hand	
39	58900-434	Right Hand	
		Upper Steering Knuckle Assembly, eHDX, ¾" Brake Fasteners, Includes Key Nos. 42-43, 45-46	1
40	60903-485	Left Hand	
41	60904-432	Right Hand	
		Kingpin Bushing and Bearing Service Kits	
	60961-628	**Axle Set,** Includes Kit Nos. 60961-629 & -630	
	60961-629	**Left Hand with Composite Thrust Bearing,** Includes Key Nos. 42-47, 49 & Loctite	
	60961-630	**Right Hand with Roller Thrust Bearing,** Includes Key Nos. 42-46, 48-49 & Loctite	
42	33117-000	Grease Zerk	2
43	68687-003	Grease Cap Assembly, Upper	2
44	68687-002	Grease Cap Assembly, Lower	2
45	58909-001	Kingpin Bushing	4
		Thrust Bearing Service Kits	
	60961-631	**Axle Set,** Includes Kit Nos. 60961-632 & -633	
	60961-632	**Left Hand Composite Thrust Bearing,** Includes Key Nos. 46-47, 49 & Loctite	
	60961-633	**Right Hand Roller Thrust Bearing,** Includes Key Nos. 46, 48-49 & Loctite	
46	68731-000	Kingpin Seal	4
47	59828-000	Left Hand Composite Thrust Bearing	1
48	64256-000L	Right Hand Roller Thrust Bearing	1
49	60236-001	⅝" Socket Head Cap Screw	4
Not Shown	60937-000	Loctite® (Red) Compound Tube	1
50	64246-000	ABS Sensor Sleeve	2
51	76879-002	Tie Rod Assembly, Includes Key Nos. 52-54	1
		Tie Rod End Service Kits	
	60961-735	**Axle Set,** Includes LH and RH Kits	
	60961-742	**Left Hand,** Includes Key Nos. 52, 54-56	
	60961-743	**Right Hand,** Includes Key Nos. 53-56	
		*Tie Rod End, Includes Key No. 54	
52		Left Hand	1
53		Right Hand	1
54		*⅞" Castle Nut	2
55		*⅞" Flat Washer	2
56		*Tie Rod Nut Cotter Pin	2
	60961-069	**Stop Bolt Service Kit, One Side,** Includes Key Nos. 57-58	
57		*½"-13 UNC Square Head Bolt	2
58		*½"-13 UNC Hex Jam Nut	2

NOTES: Quantities specified are for the vehicle. Quantities of service kit components may vary from amount shown in list.

* Item included in kit / assembly only, part not sold separately.

** Not supplied by Hendrickson, used for reference only. Hendrickson is not responsible for components supplied by the vehicle manufacturer. For assistance with maintenance and rebuild instructions on these components, see vehicle manufacturer.

Special Tools

KINGPIN BUSHING TOOLS

NOTE: Hendrickson does not supply these tools. Contact tool manufacturer at www.mcmaster.com

ADJUSTABLE STRAIGHT FLUTE REAMER

1.78" - 2.09" Cutting Diameter

McMaster-Carr #3141A28

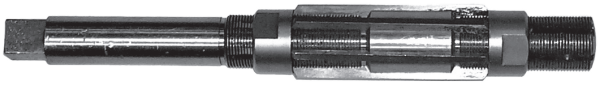

EXTENSION PILOT TOOL

for 1.78" to 2.09" Adjustable Reamer

McMaster-Carr #3004A32

OR

PRECISION-FINISH CYLINDER HONE

1.75" to 2.75" Cylinder ID

McMaster-Carr #7362A45

This is a general parts list to provide directional information. Components may vary by model. Questions in regards to parts, contact Hendrickson Truck Parts at 855.743.3733 (Toll-free U.S. and Canada), 630.910.2800 (Outside U.S. and Canada) or email: truckparts@hendrickson-intl.com.

Actual product performance may vary depending upon vehicle configuration, operation, service and other factors.
All applications must comply with applicable Hendrickson specifications and must be approved by the respective vehicle manufacturer with the vehicle in its original, as-built configuration.
Contact Hendrickson for additional details regarding specifications, applications, capacities, and operation, service and maintenance instructions.

*Call Hendrickson at **630.910.2800** or **855.RIDERED (855.743.3733)** for additional information.*

HENDRICKSON

www.hendrickson-intl.com

TRUCK COMMERCIAL VEHICLE SYSTEMS
800 South Frontage Road
Woodridge, IL 60517-4904 USA
855.743.3733 (Toll-free U.S. and Canada)
630.910.2800 (Outside U.S. and Canada)
Fax 630.910.2899

SP-352 Rev D 04-26

© 2023 – 2026 Hendrickson USA, L.L.C. All Rights Reserved. All trademarks shown are owned by Hendrickson USA, L.L.C., or one of the affiliates, in one or more countries.

Information contained in this literature was accurate at the time of publication. Product changes may have been made after the copyright date that are not reflected.

Printed in United States of America