innovation BUILT IN™

PARTS LIST

COMPOSILITE® EXS SUSPENSIONS

LIT NO: PL-H832 **REV:** B
DATE: June 2023

Parts List H832 is intended to help you find commonly required aftermarket parts and aftermarket parts kits for COMPOSILITE® EXS Steerable Auxiliary Lift Axle Suspensions (08K, 10K, 13K).

For assistance with replacement axle weldments, seat kits and stabilizer brackets, please contact Hendrickson Customer Service:1-800-660-2829 — liftaxle@hendrickson-intl.com.

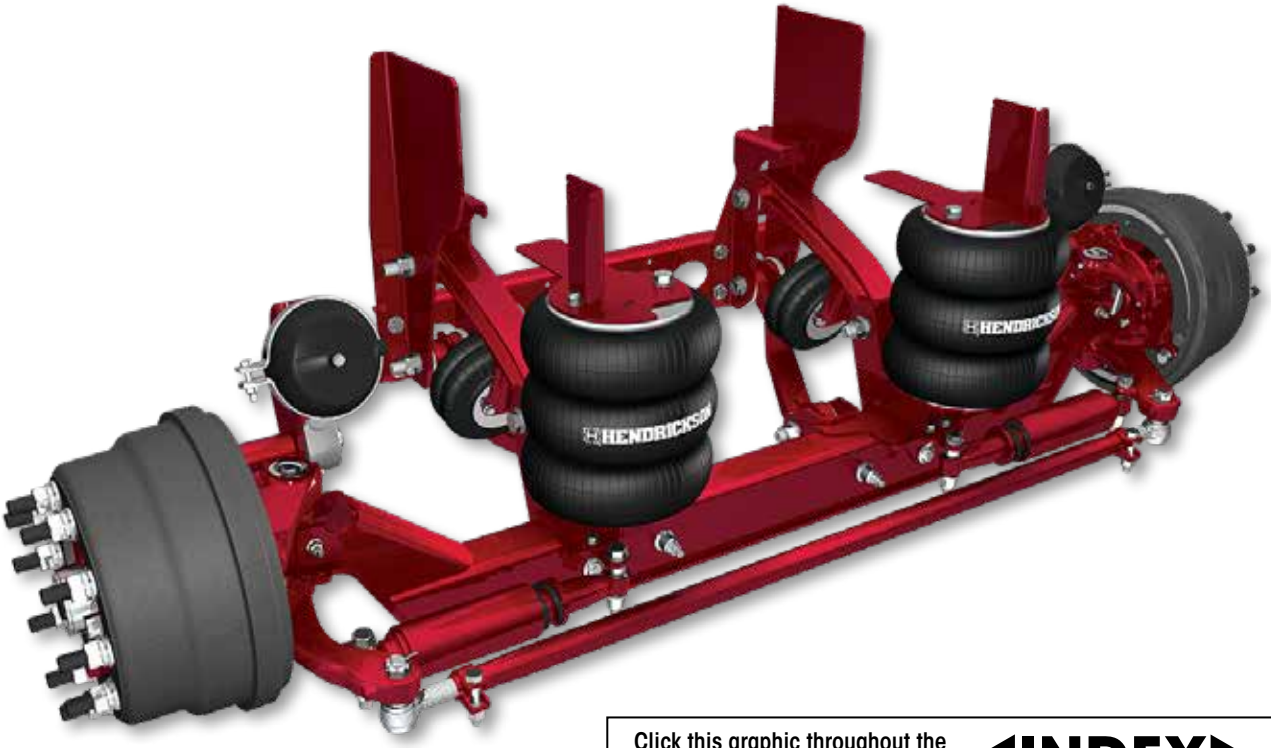

Click this graphic throughout the document to return to Table of Contents: INDEX HENDRICKSON

Always Use Hendrickson Genuine Parts for the Best Quality in the Industry.

Click on the logo below to register for an account for Hendrickson's Parts+ Lookup System:

PLUS PARTS LOOK UP SYSTEM

HENDRICKSON
The World Rides On Us®

Table of Contents: Parts and Parts Kits

Section 1	Tie Rod Assemblies & Kits	3
Section 2	Brake Kits & Knuckle Hardware	4
Section 3	Backbones & Uppers (Steering Knuckle)	5
Section 4	Side Rails & Saddles	6
Section 5	Dust Shield Kits	7
Section 6	Pivot Bolt Kits, Bushing Kits & Trailing Arms	8
Section 7	Crossmembers	9
Section 8	Weld-on Frame Brackets	11
Section 9	Bolt-on Hangers	13
Section 10	Air Springs & Upper Air Spring Plates	15
Section 11	Kingpin Kits	16
Section 12	Associated Drawings List	17

Note: The illustrations used throughout Parts List H832 are representational in nature and might not reflect the latest design changes, integrated components, and are not comprehensive in regard to all of the spare parts offered for specific suspension models and configurations. Please contact Hendrickson Customer Service for assistance: liftaxle@hendrickson-intl.com

SECTION 1
TIE ROD ASSEMBLIES & KITS

TABLE 1:

DESCRIPTION	YEAR(S) OF MFG	CAPACITY	SUB DESCRIPTION	QTY	PART #
All TIE RODS	2019-	08K,10K	Standard Round-Tube Tie Rod	1	R-015528-1000
	2019-	13K	Standard Round-Tube Tie Rod	1	R-015528-1300
	2019-	08K,10K,13K	Cotter Pin (Standard Round-Tube Tie Rod)	2	R-01524-15
	2019-	08K,10K	Heavy-Duty Compliant Tie Rod	1	R-013544-10
	2019-	13K	Heavy-Duty Compliant Tie Rod	1	R-013544-13
	2019-	08K,10K	Compliant Tie Rod	1	R-014436-10
	2019-	13K	Compliant Tie Rod	1	R-014436-13

TABLE 2:

DESCRIPTION	YEAR(S) OF MFG	CAPACITY	SUB DESCRIPTION	QTY	PART #
COMPLIANT TIE ROD CONVERSION KITS	2019-	08K,10K,13K	Conversion Kit w/Stabilizers	1	R-018933-1000
			Conversion Kit w/Stabilizers	1	R-018933-1300

STANDARD ROUND-TUBE TIE ROD

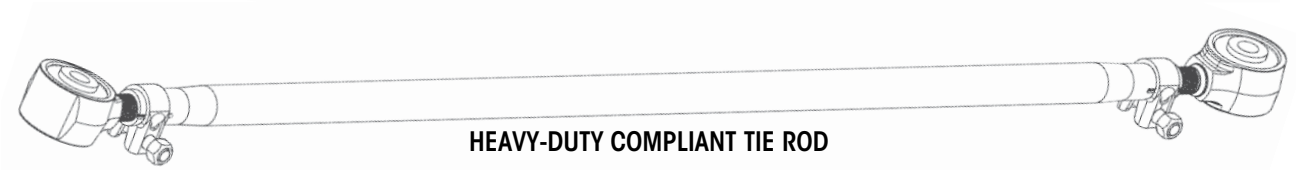

HEAVY-DUTY COMPLIANT TIE ROD

COMPLIANT TIE ROD

SECTION 2
BRAKE KITS & KNUCKLE HARDWARE

TABLE 1:

DESCRIPTION	YEAR(S) OF MFG	CAPACITY	SUB DESCRIPTION	QTY	PART #	Drawing #
BRAKE KITS	2019-	08K, 10K	Fabricated Bolt-on Backbone	1	R-017449-0500	017449-0501
	2019-	13K	Fabricated, 1" Thick Backbone	1	R-017449-1500	017449-1501
	2019-		Fabricated, 1.25" Thick Backbone	1	R-017449-2000	017449-2001
	2019-		Cast Integrated Backbone	1	R-017449-1400	017449-1401
	2019-		Cast Bolt-on Backbone (ADB)	1	R-017449-0400	017449-0401
	2019-		Meritor (ADB)	1	R-017449-0600	017449-0601
	2019-		15X4 HD Cast Int Backbone	1	R-017449-2300	017449-2301
	2019-		ADB22X-LT Bolt Kit	1	R-017449-2200	017449-2201
	2019-		Shoes, Springs, Anchor Pins	2	R-017449-2400	017449-2401

TABLE 2:

DESCRIPTION	YEAR(S) OF MFG	CAPACITY	SUB DESCRIPTION	QTY	PART #	Drawing #
KNUCKLE ASSEMBLY HARDWARE KITS	2019-	08K, 10K	Knuckle Assembly		SEE BRAKE KIT	SEE BRAKE KIT
	2019-	13K	Fabricated Knuckle Assembly	1	R-018186-0300	018186-0301
	2019-		Cast Integrated Knuckle Assembly	1	R-018186-0100	018186-0101
	2019-		Cast Bolt-on Knuckle Assembly	1	R-018186-0200	018186-0201

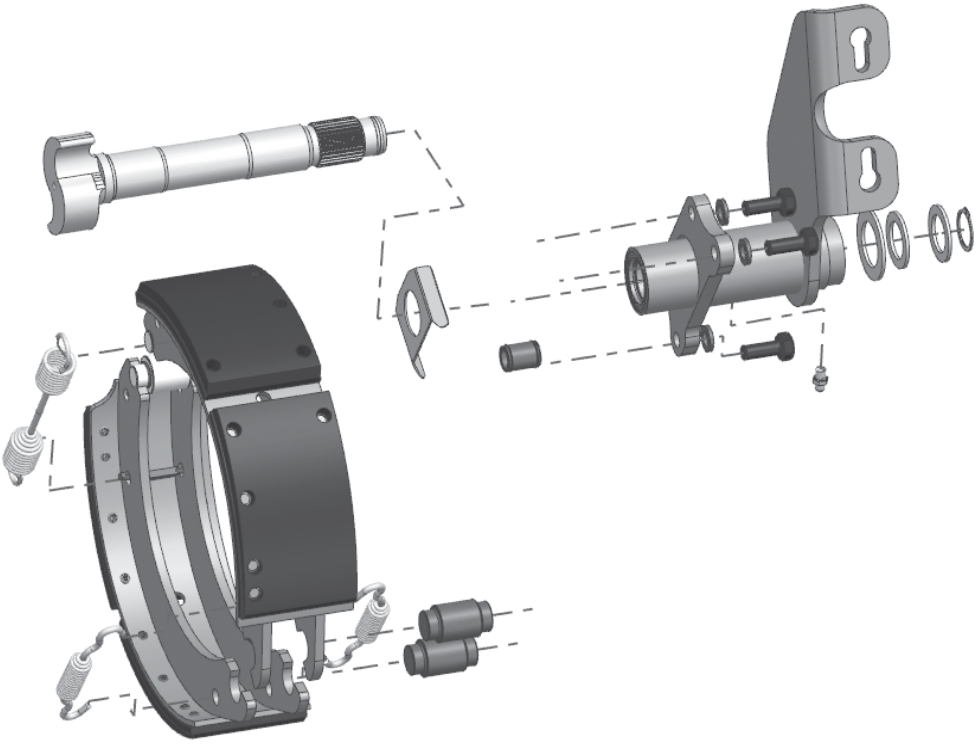

BRAKE HARDWARE KIT FOR CAST INTEGRATED BACKBONE

SECTION 3
BACKBONES & UPPERS (STEERING KNUCKLE)

TABLE 1:

DESCRIPTION	YEAR(S) OF MFG	CAPACITY	SUB DESCRIPTION	QTY	PART #
BACKBONES	2019-	08K, 10K	Fabricated (LH)	1	R-018053-21
	2019-		Fabricated (RH)	1	R-018053-22
	2019-		Fabricated (LH), Inverted Taper	1	R-015534-21
	2019-		Fabricated (RH), Inverted Taper	1	R-015534-22
	2019-	13K	Fabricated 1.25" (LH)	1	R-017665-31
	2019-		Fabricated 1.25" (RH)	1	R-017665-32
	2019-		Fabricated 1.25" (LH), Inverted Taper	1	R-017661-31
	2019-		Fabricated 1.25" (RH), Inverted Taper	1	R-017661-32
	2019-		Cast Integrated (LH)	1	R-017420-11
	2019-		Cast Integrated (RH)	1	R-017420-12
	2019-		Cast Integrated (LH), Inverted Taper	1	R-017420-21
	2019-		Cast Integrated (RH), Inverted Taper	1	R-017420-22
	2019-		Cast Bolt-On (LH)	1	R-018064-01
	2019-		Cast Bolt-On (RH)	1	R-018064-02
	2019-		Cast Bolt-On (LH), Inverted Taper	1	R-018064-21
	2019-		Cast Bolt-On (RH), Inverted Taper	1	R-018064-22

TABLE 2:

DESCRIPTION	YEAR(S) OF MFG	CAPACITY	SUB DESCRIPTION	QTY	PART #
UPPERS	2019-	08K, 10K	Fabricated (LH)	1	R-018054-01
	2019-		Fabricated (RH)	1	R-018054-02
	2019-	13K	Cast Int (LH)	1	R-060904-501
	2019-		Cast Int (RH)	1	R-060904-502
	2019-		Cast Bolt-On (LH)	1	R-060904-501
	2019-		Cast Bolt-On (RH)	1	R-060904-502
	2019-		Fabricated 1.25" (Not Handed)	2	R-017819-10

BACKBONE

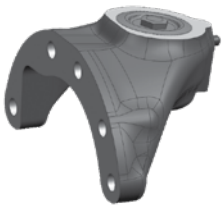

UPPER

SECTION 4
SIDE RAILS & SADDLES

TABLE 1:

DESCRIPTION	YEAR(S) OF MFG	CAPACITY	SUB DESCRIPTION	QTY	PART #
SIDE RAILS	2019-	08K, 10K, 13K	Standard Aftermarket (LH)	1	R-017377-01
	2019-		Standard Aftermarket (RH)	1	R-017377-02
	2019-		Standard Roll-Off (LH)	1	R-017939-01
	2019-		Standard Roll-Off (RH)	1	R-017939-02
	2019-		Plus 2" Aftermarket (LH)	1	R-017377-21
	2019-		Plus 2" Aftermarket (RH)	1	R-017377-22
	2019-		Plus 2" Roll-Off (LH)	1	R-017939-21
	2019-		Plus 2" Roll-Off (RH)	1	R-017939-22

TABLE 2:

DESCRIPTION	YEAR(S) OF MFG	CAPACITY	SUB DESCRIPTION	QTY	PART #
SADDLES	2019-	08K, 10K, 13K	Standard Aftermarket (LH)	1	R-017376-01
	2019-		Standard Aftermarket (RH)	1	R-017376-02
	2019-		Standard Roll-Off (LH)	1	R-017940-01
	2019-		Standard Roll-Off (RH)	1	R-017940-02
	2019-		Plus 2" Aftermarket (LH)	1	R-017376-21
	2019-		Plus 2" Aftermarket (RH)	1	R-017376-22
	2019-		Plus 2" Roll-Off (LH)	1	R-017940-21
	2019-		Plus 2" Roll-Off (RH)	1	R-017940-22

SIDE RAIL

SADDLE

SECTION 5
DUST SHIELD KITS

TABLE 1:

DESCRIPTION	YEAR(S) OF MFG	CAPACITY	SUB DESCRIPTION	QTY	PART #	Drawing #
DUST SHIELD KITS	2019-	08K, 10K	Integrated Into Brake		N/A	017449-0501
	2019-	13K	Cast Bolt-On Knuckle Assembly (Drum Bendix 006563)	1	R-009983	N/A
	2019-		Cast Integrated Knuckle Assembly	1	R-018986-0100	018986-0101
	2019-		Cast Bolt-On Knuckle Assembly	1	R-018986-0200	018986-0201
	2019-		EXS13 Fabricated N-Spindle Knuckle Assembly	1	R-018986-0300	018986-0301

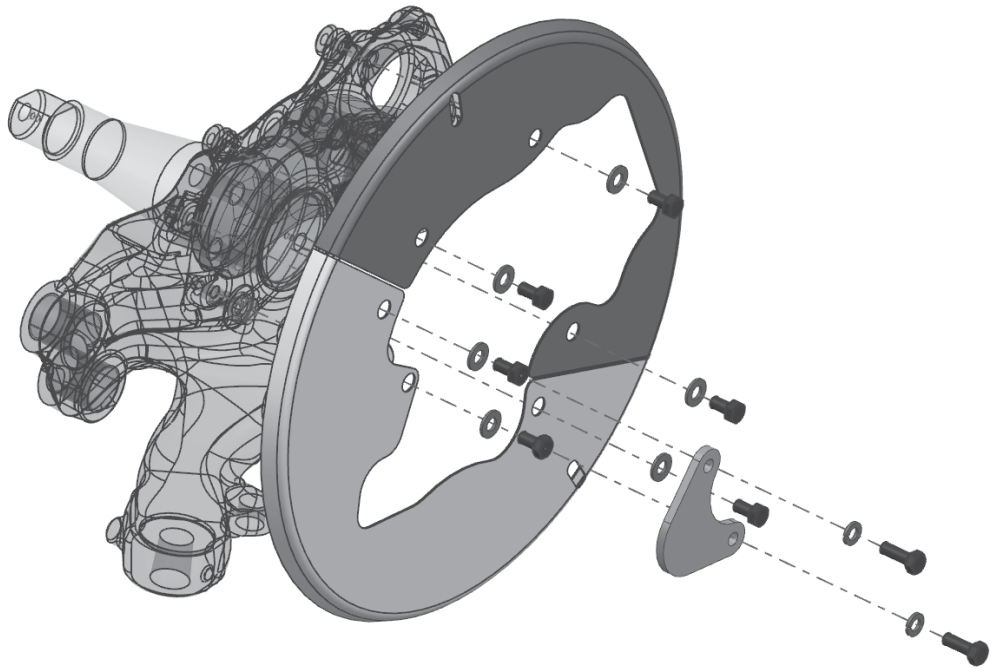

DUST SHIELD KIT

NOTE: KNUCKLE AND LOCKSTRAIGHT TARGET NOT INCLUDED.

SECTION 6
PIVOT BOLT KITS, BUSHING KITS & TRAILING ARMS

TABLE 1:

DESCRIPTION	CAPACITY	SUB DESCRIPTION	QTY	PART #	Drawing #
PIVOT BOLT KITS	08K, 10K, 13K	Narrow Alignment	1	R-018122-0100	018122-0110
		Centered Alignment	1	R-018122-0100	018122-0111
		Wide Alignment	1	R-018122-0100	018122-0112
		Truck Adjustable	1	R-018122-0400	018122-0401
		Truck 35.0" Frame Width	1	R-018122-0400	018122-0402
		Truck 35.5" Frame Width	1	R-018122-0400	018122-0403
		Roll-Off Narrow Alignment	1	R-018122-0500	018122-0501
		Roll-Off Centered Alignment	1	R-018122-0500	018122-0502
		Roll-Off Wide Alignment	1	R-018122-0500	018122-0503
		Roll-Off Adjustable	1	R-018122-0600	018122-0601
		Roll-Off 35.0" Frame Width	1	R-018122-0600	018122-0603
		Roll-Off 35.5" Frame Width	1	R-018122-0600	018122-0604

TABLE 2:

DESCRIPTION	CAPACITY	SUB DESCRIPTION	QTY	PART #	Drawing #
PIVOT BOLT & BUSHING KITS	08K, 10K, 13K	Narrow Alignment	1	R-020126-0100	020126-0000
		Centered Alignment	1	R-020126-0100	020126-0000
		Wide Alignment	1	R-020126-0100	020126-0000
		Truck Adjustable	1	R-020126-0400	020126-0000
		Truck 35.0" Frame Width	1	R-020126-0400	020126-0000
		Truck 35.5" Frame Width	1	R-020126-0400	020126-0000
		Roll-Off Narrow Alignment	1	R-020126-0500	020126-0000
		Roll-Off Centered Alignment	1	R-020126-0500	020126-0000
		Roll-Off Wide Alignment	1	R-020126-0500	020126-0000
		Roll-Off Adjustable	1	R-020126-0600	020126-0000
		Roll-Off 35.0" Frame Width	1	R-020126-0600	020126-0000
		Roll-Off 35.5" Frame Width	1	R-020126-0600	020126-0000

SECTION 6 (Continued)
PIVOT BOLT KITS, BUSHING KITS & TRAILING ARMS

TABLE 3:

DESCRIPTION	CAPACITY	SUB DESCRIPTION	QTY	PART #
TRAILING ARM & BUSHING ASSEMBLY	08K, 10K, 13K	Bottom right-hand trailing arm, 6" offset	1	R-018881-01
		Bottom left-hand trailing arm, 6" offset	1	R-018881-02
		Upper trailing arm, straight	2	R-017415-00

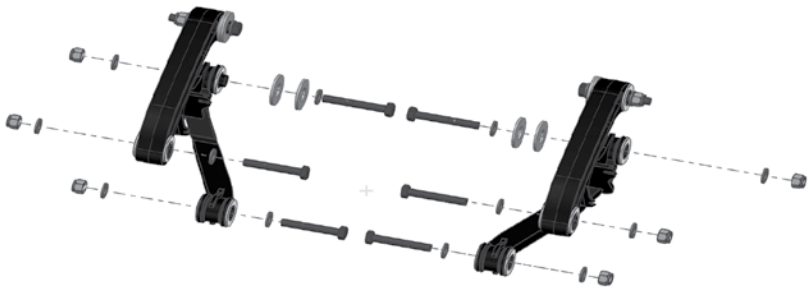

BEAMS AND PIVOT BOLTS

SECTION 7
CROSSMEMBERS

TABLE 1:

DESCRIPTION	YEAR(S) OF MFG	CAPACITY	SUB DESCRIPTION	QTY	PART #
CROSSMEMBERS (TRUCK)	2019-	08K, 10K, 13K	33.5" Frame Width	1	R-017374-1335
	2019-		34.0" Frame Width	1	R-017374-1340
	2019-		34.5" Frame Width	1	R-017374-1345
	2019-		35.0" Frame Width	1	R-017374-1350
	2019-		35.5" Frame Width	1	R-017374-1355
	2019-		Adjustable Frame Width (33.5"-34.5")	1	R-017374-2335

TABLE 2:

DESCRIPTION	YEAR(S) OF MFG	CAPACITY	SUB DESCRIPTION	QTY	PART #
CROSSMEMBERS (ROLL-OFF)	2019-	13K	33.5" Frame Width	1	R-017374-5335
	2019-		34.0" Frame Width	1	R-017374-5340
	2019-		34.5" Frame Width	1	R-017374-5345
	2019-		35.0" Frame Width	1	R-017374-5350
	2019-		35.5" Frame Width	1	R-017374-5355
	2019-		Adjustable Frame Width (33.5"-34.5")	1	R-017374-3335

TABLE 3:

DESCRIPTION	YEAR(S) OF MFG	CAPACITY	SUB DESCRIPTION	QTY	PART #
CROSSMEMBERS (TRAILER)	2019-	13K	30.5" Frame Attachment Center	1	R-017657-1305
	2019-		31.0" Frame Attachment Center	1	R-017657-1310
	2019-		31.5" Frame Attachment Center	1	R-017657-1315
	2019-		32.0" Frame Attachment Center	1	R-017657-1320
	2019-		32.5" Frame Attachment Center	1	R-017657-1325

SECTION 7 (Continued)
CROSSMEMBERS

TABLE 3: (Continued)

DESCRIPTION	YEAR(S) OF MFG	CAPACITY	SUB DESCRIPTION	QTY	PART #
CROSSMEMBERS (TRAILER)	2019-	13K	33.0" Frame Attachment Center	1	R-017657-1330
	2019-		33.5" Frame Attachment Center	1	R-017657-1335
	2019-		34.0" Frame Attachment Center	1	R-017657-1340
	2019-		34.5" Frame Attachment Center	1	R-017657-1345
	2019-		35.0" Frame Attachment Center	1	R-017657-1350
	2019-		35.5" Frame Attachment Center	1	R-017657-1355
	2019-		36.0" Frame Attachment Center	1	R-017657-1360
	2019-		36.5" Frame Attachment Center	1	R-017657-1365
	2019-		37.0" Frame Attachment Center	1	R-017657-1370
	2019-		37.5" Frame Attachment Center	1	R-017657-1375
	2019-		38.0" Frame Attachment Center	1	R-017657-1380
	2019-		38.5" Frame Attachment Center	1	R-017657-1385
	2019-		39.0" Frame Attachment Center	1	R-017657-1390
	2019-		39.5" Frame Attachment Center	1	R-017657-1395
	2019-		40.0" Frame Attachment Center	1	R-017657-1400
	2019-		40.5" Frame Attachment Center	1	R-017657-1405
	2019-		41.0" Frame Attachment Center	1	R-017657-1410
	2019-		41.5" Frame Attachment Center	1	R-017657-1415
	2019-		42.0" Frame Attachment Center	1	R-017657-1420
	2019-		42.5" Frame Attachment Center	1	R-017657-1425
	2019-		43.0" Frame Attachment Center	1	R-017657-1430
	2019-		43.5" Frame Attachment Center	1	R-017657-1435
	2019-		44.0" Frame Attachment Center	1	R-017657-1440
	2019-		44.5" Frame Attachment Center	1	R-017657-1445
	2019-		45.0" Frame Attachment Center	1	R-017657-1450

TABLE 4:

DESCRIPTION	CAPACITY	SUB DESCRIPTION	QTY	PART #	Drawing #
CROSSMEMBER INSTALL DRAWING	08K, 10K, 13K	Bolt-on Hardware Kit Install Dwg	1	R-019702-0100	019702-0101
		Bolt-on Hardware Kit Install Dwg (Inverted Nuts)	1		019702-0102

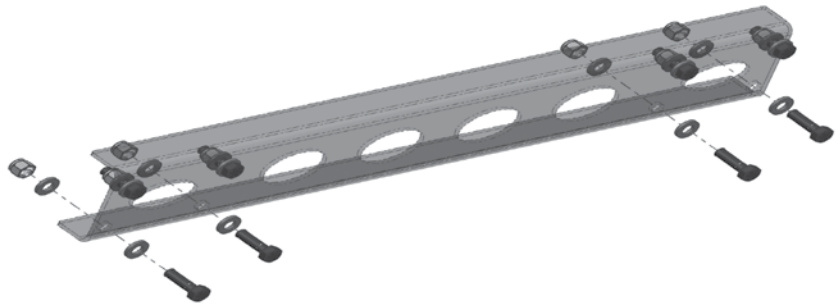

CROSSMEMBER AND HARDWARE

SECTION 8
WELD-ON FRAME BRACKETS

TABLE 1:

DESCRIPTION	YEAR(S) OF MFG	CAPACITY	SUB DESCRIPTION	QTY	PART #
WELD-ON FRAME BRACKET ASSEMBLY (TRAILER)	2019-	13K	30.5" Frame Attachment Center	1	R-017638-0305
	2019-		31.0" Frame Attachment Center	1	R-017638-0310
	2019-		31.5" Frame Attachment Center	1	R-017638-0315
	2019-		32.0" Frame Attachment Center	1	R-017638-0320
	2019-		32.5" Frame Attachment Center	1	R-017638-0325
	2019-		33.0" Frame Attachment Center	1	R-017638-0330
	2019-		33.5" Frame Attachment Center	1	R-017638-0335
	2019-		34.0" Frame Attachment Center	1	R-017638-0340
	2019-		34.5" Frame Attachment Center	1	R-017638-0345
	2019-		35.0" Frame Attachment Center	1	R-017638-0350
	2019-		35.5" Frame Attachment Center	1	R-017638-0355
	2019-		36.0" Frame Attachment Center	1	R-017638-0360
	2019-		36.5" Frame Attachment Center	1	R-017638-0365
	2019-		37.0" Frame Attachment Center	1	R-017638-0370
	2019-		37.5" Frame Attachment Center	1	R-017638-0375
	2019-		38.0" Frame Attachment Center	1	R-017638-0380
	2019-		38.5" Frame Attachment Center	1	R-017638-0385
	2019-		39.0" Frame Attachment Center	1	R-017638-0390
	2019-		39.5" Frame Attachment Center	1	R-017638-0395
	2019-		40.0" Frame Attachment Center	1	R-017638-0400
	2019-		40.5" Frame Attachment Center	1	R-017638-0405
	2019-		41.0" Frame Attachment Center	1	R-017638-0410
	2019-		41.5" Frame Attachment Center	1	R-017638-0415
	2019-		42.0" Frame Attachment Center	1	R-017638-0420
	2019-		42.5" Frame Attachment Center	1	R-017638-0425
	2019-		43.0" Frame Attachment Center	1	R-017638-0430
	2019-		43.5" Frame Attachment Center	1	R-017638-0435
	2019-		44.0" Frame Attachment Center	1	R-017638-0440
	2019-		44.5" Frame Attachment Center	1	R-017638-0445
	2019-		45.0" Frame Attachment Center	1	R-017638-0450

SECTION 8 (Continued)
WELD-ON FRAME BRACKETS

TABLE 2:

DESCRIPTION	YEAR(S) OF MFG	CAPACITY	SUB DESCRIPTION	QTY	PART #
WELD-ON FRAME BRACKET ASSEMBLY +2" (TRAILER)	2019-	13K	30.5" Frame Attachment Center	1	R-017639-0305
	2019-		31.0" Frame Attachment Center	1	R-017639-0310
	2019-		31.5" Frame Attachment Center	1	R-017639-0315
	2019-		32.0" Frame Attachment Center	1	R-017639-0320
	2019-		32.5" Frame Attachment Center	1	R-017639-0325
	2019-		33.0" Frame Attachment Center	1	R-017639-0330
	2019-		33.5" Frame Attachment Center	1	R-017639-0335
	2019-		34.0" Frame Attachment Center	1	R-017639-0340
	2019-		34.5" Frame Attachment Center	1	R-017639-0345
	2019-		35.0" Frame Attachment Center	1	R-017639-0350
	2019-		35.5" Frame Attachment Center	1	R-017639-0355
	2019-		36.0" Frame Attachment Center	1	R-017639-0360
	2019-		36.5" Frame Attachment Center	1	R-017639-0365
	2019-		37.0" Frame Attachment Center	1	R-017639-0370
	2019-		37.5" Frame Attachment Center	1	R-017639-0375
	2019-		38.0" Frame Attachment Center	1	R-017639-0380
	2019-		38.5" Frame Attachment Center	1	R-017639-0385
	2019-		39.0" Frame Attachment Center	1	R-017639-0390
	2019-		39.5" Frame Attachment Center	1	R-017639-0395
	2019-		40.0" Frame Attachment Center	1	R-017639-0400
	2019-		40.5" Frame Attachment Center	1	R-017639-0405
	2019-		41.0" Frame Attachment Center	1	R-017639-0410
	2019-		41.5" Frame Attachment Center	1	R-017639-0415
	2019-		42.0" Frame Attachment Center	1	R-017639-0420
	2019-		42.5" Frame Attachment Center	1	R-017639-0425
	2019-		43.0" Frame Attachment Center	1	R-017639-0430
	2019-		43.5" Frame Attachment Center	1	R-017639-0435
	2019-		44.0" Frame Attachment Center	1	R-017639-0440
	2019-		44.5" Frame Attachment Center	1	R-017639-0445
	2019-		45.0" Frame Attachment Center	1	R-017639-0450

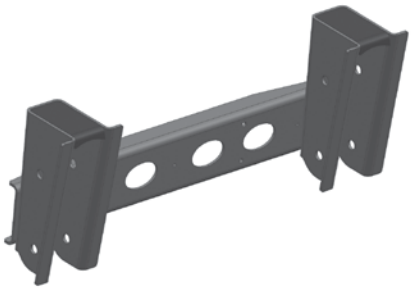

WELD-ON FRAME BRACKET ASSEMBLY

SECTION 9
BOLT-ON HANGERS

TABLE 1:

DESCRIPTION	YEAR(S) OF MFG	CAPACITY	SUB DESCRIPTION	QTY	PART #
BOLT-ON HANGER TOWER (TRAILER)	2019-	13K	Pattern B (LH)	1	R-017646-01
	2019-		Pattern B (RH)	1	R-017646-02
	2019-		Pattern B (LH) Galvanized	1	R-017646-11
	2019-		Pattern B (RH) Galvanized	1	R-017646-12
	2019-		Pattern E (LH)	1	R-017647-01
	2019-		Pattern E (RH)	1	R-017647-02
	2019-		Pattern E (LH) Galvanized	1	R-017647-11
	2019-		Pattern E (RH) Galvanized	1	R-017647-12
	2019-		Pattern J (LH)	1	R-017648-01
	2019-		Pattern J (RH)	1	R-017648-02
	2019-		Pattern J (LH) Galvanized	1	R-017648-11
	2019-		Pattern J (RH) Galvanized	1	R-017648-12
	2019-		Pattern Q (LH)	1	R-017649-01
	2019-		Pattern Q (RH)	1	R-017649-02
	2019-		Pattern Q (LH) Galvanized	1	R-017649-11
	2019-		Pattern Q (RH) Galvanized	1	R-017649-12
	2019-		Pattern U (LH)	1	R-017650-01
	2019-		Pattern U (RH)	1	R-017650-02
	2019-		Pattern U (LH) Galvanized	1	R-017650-11
	2019-		Pattern U (RH) Galvanized	1	R-017650-12

SECTION 9
BOLT-ON HANGERS (Continued)

TABLE 2:

DESCRIPTION	YEAR(S) OF MFG	CAPACITY	SUB DESCRIPTION	QTY	PART #
BOLT-ON HANGER TOWER +2" (TRAILER)	2019-	13K	Pattern B (LH) +2"	1	R-017651-01
	2019-		Pattern B (RH) +2"	1	R-017651-02
	2019-		Pattern B (LH) +2" Galvanized	1	R-017651-11
	2019-		Pattern B (RH) +2" Galvanized	1	R-017651-12
	2019-		Pattern E (LH) +2"	1	R-017652-01
	2019-		Pattern E (RH) +2"	1	R-017652-02
	2019-		Pattern E (LH) +2" Galvanized	1	R-017652-11
	2019-		Pattern E (RH) +2" Galvanized	1	R-017652-12
	2019-		Pattern J (LH) +2"	1	R-017653-01
	2019-		Pattern J (RH) +2"	1	R-017653-02
	2019-		Pattern J (LH) +2" Galvanized	1	R-017653-11
	2019-		Pattern J (RH) +2" Galvanized	1	R-017653-12
	2019-		Pattern Q (LH) +2"	1	R-017654-01
	2019-		Pattern Q (RH) +2"	1	R-017654-02
	2019-		Pattern Q (LH) +2" Galvanized	1	R-017654-11
	2019-		Pattern Q (RH) +2" Galvanized	1	R-017654-12
	2019-		Pattern U (LH) +2"	1	017655-01
	2019-		Pattern U (RH) +2"	1	017655-02
	2019-		Pattern U (LH) +2" Galvanized	1	017655-11
	2019-		Pattern U (RH) +2" Galvanized	1	017655-12

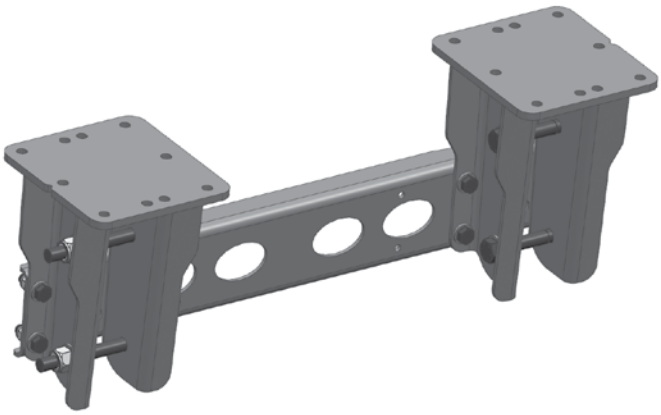

BOLT-ON TRAILER HANGER
NOTE: CROSSMEMBER AND HARDWARE NOT INCLUDED.

SECTION 10
AIR SPRINGS & UPPER AIR SPRING PLATES

TABLE 1:

DESCRIPTION	CAPACITY	SUB DESCRIPTION	QTY	PART #	Drawing #
RIDE & LIFT SPRINGS	08K, 10K, 13K	Ride Spring: Truck / Roll-Off	2	R-B-14487	007596-0103
		Hardware Kit: Ride Spring - Truck / Roll-Off	2	R-007596	007596-0102 / 007596-0103
		Hardware Kit: Ride Spring - Alternate Roll-Off	2	R-007596-0200	007596-0201
		Ride Spring: Trailer	2	R-001015	018948-0202
		Hardware Kit: Ride Spring - Trailer	1	R-018948-0200	018948-0202
		Lift Spring	2	R-005079	N/A
		Hardware Kit: Lift Spring, Toward Crossmember	1	R-019701-0100	019701-0101
		Hardware Kit: Lift Spring, Toward Axle	1	R-019701-0100	019701-0102

TABLE 2:

DESCRIPTION	YEAR(S) OF MFG	CAPACITY	SUB DESCRIPTION	QTY	PART #
UPPER AIR SPRING PLATES	2019-	08K, 10K, 13K	Truck Standard (LH)	1	R-018215-01
	2019-		Truck Standard (RH)	1	R-018215-02
	2019-		Truck Pre-Plumb (LH)	1	R-018222-01
	2019-		Truck Pre-Plumb (RH)	1	R-018222-02
	2019-		Roll-Off Standard (LH)	1	R-018209-01
	2019-		Roll-Off Standard (RH)	1	R-018209-02
	2019-		Roll-Off Pre-Plumb (LH)	1	R-018027-01
	2019-		Roll-Off Pre-Plumb (RH)	1	R-018027-02
	2019-		Alt. Roll-Off Standard (LH)	1	R-018252-01
	2019-		Alt. Roll-Off Standard (LH)	1	R-018252-02
	2019-		Alt. Roll-Off Pre-Plumb (LH)	1	R-017991-01
	2019-		Alt. Roll-Off Pre-Plumb (RH)	1	R-017991-02
	2019-		Trailer Upper A / S Plate (LH)	1	R-017422-01
	2019-		Trailer Upper A / S Plate (RH)	1	R-017422-02
	2019-		Trailer Upper A / S Plate (LH) Galvanized	1	R-014722-11
	2019-		Trailer Upper A / S Plate (RH) Galvanized	1	R-014722-12
	2019-		Trailer Upper A / S Plate Pre-Plumb (LH)	1	R-018221-01
	2019-		Trailer Upper A / S Plate Pre-Plumb (RH)	1	R-018221-02

UPPER AIR SPRING PLATE (TRUCK)

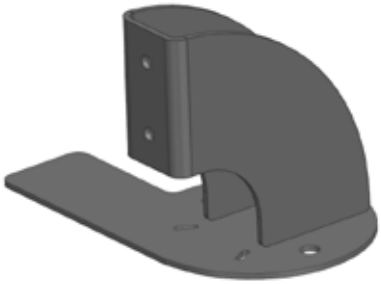

UPPER AIR SPRING PLATE (ROLL-OFF)

UPPER AIR SPRING PLATE (TRAILER)

SECTION 11
KINGPIN KITS

TABLE 1:

MODEL	PREFIX	CAST INTEGRATED KNUCKLE STANDARD KINGPIN	CAST INTEGRATED KNUCKLE GROOVED KINGPIN	CAST BOLT-ON KNUCKLE STANDARD KINGPIN	CAST BOLT-ON KNUCKLE GROOVED KINGPIN	FAB N-SPINDLE KNUCKLE STANDARD KINGPIN	FAB N-SPINDLE KNUCKLE GROOVED KINGPIN	FAB KNUCKLE STANDARD KINGPIN	FAB KNUCKLE GROOVED KINGPIN	QTY
EX	13K	R-019015-01	R-019015-02	R-019015-03	R-019015-04	R-019015-05	R-019015-06	****	****	1
		w/o Kingpin: R-019015-10	w/o Kingpin: R-019015-10	w/o Kingpin: R-019015-30	w/o Kingpin: R-019015-30	w/o Kingpin: R-019015-50	w/o Kingpin: R-019015-50	****	****	1
EX	10K	****	****	****	****	****	****	R-019015-07	R-019015-08	1
		****	****	****	****	****	****	w/o Kingpin: R-019015-70	w/o Kingpin: R-019015-70	1

KINGPIN AND BUSHING KIT

SECTION 12
ASSOCIATED DRAWINGS

Clicking on an individual drawing number below will take you to that location in the document.

Section 1	**Drawings: Tie Rod Assemblies & Kits:** • See Separate Literature: H785
Section 2	**Drawings: Brake Kits & Knuckle Hardware:** • 017449-1501, 017449-2001, 017449-1401, 017449-0401, 017449-0501, 017449-0601, 017449-2301, 017449-2201, 017449-2401, 018186-0301, 018186-0101, 018186-0201
Section 3	**Drawings: Backbones & Uppers (Steering Knuckle):** • See Section 3 (Image)
Section 4	**Drawings: Side Rails & Saddles:** • See Section 6
Section 5	**Drawings: Dust Shield Kits:** • 017449-0501, 018986-0101, 018986-0201, 018986-0301
Section 6	**Drawings: Trailing Arms & Pivot Bolt Kits:** • 018122-0110, 018122-0111, 018122-0112, 018122-0401, 018122-0402, 018122-0403, 018122-0501, 018122-0502, 018122-0503, 018122-0601, 018122-0603, 018122-0604, 020126-0000
Section 7	**Drawings: Crossmembers:** • 019702-0101, 019702-0102
Section 8	**Drawings: Weld-on Frame Brackets:** • See Section 6
Section 9	**Drawings: Bolt-on Hangers:** • See Section 6
Section 10	**Drawings: Air Springs & Upper Air Spring Plates:** • 007596-0103, 007596-0102, 007596-0201, 018948-0202, 019701-0101, 019701-0102
Section 11	**Drawings: Kingpin Kits:**

NOTES:
1. 5/8"-11 BOLT TORQUE SPEC: 160-180 FT-LBS.
2. APPLY ANTI-SEIZE LUBRICANT 360 DEGREES AROUND CAM TUBE ON SURFACE SPECIFIED AND ON THE S-CAM SPLINES.
3. KIT CONTAINS PARTS FOR BOTH LEFT AND RIGHT HAND ASSEMBLIES (LEFT HAND ASSEMBLY SHOWN).

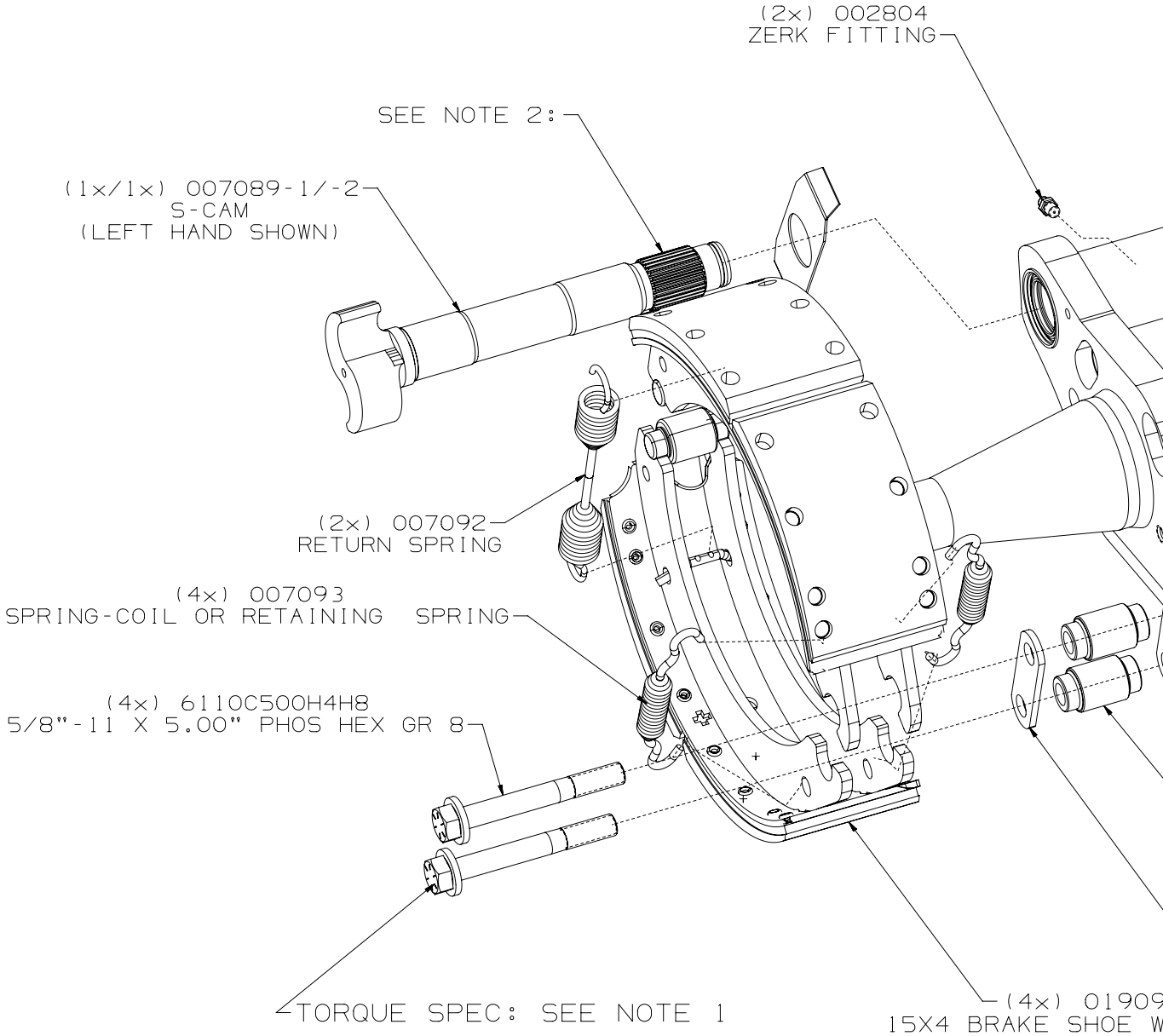

REV	ZONE	DESCRIPTION	BY / DATE	CHK / DATE	ENG / DATE	CN
A		RELEASED FOR PRODUCTION	JAG 06-01-20	JHS 06-01-20	JAG 06-01-20	20-0 431

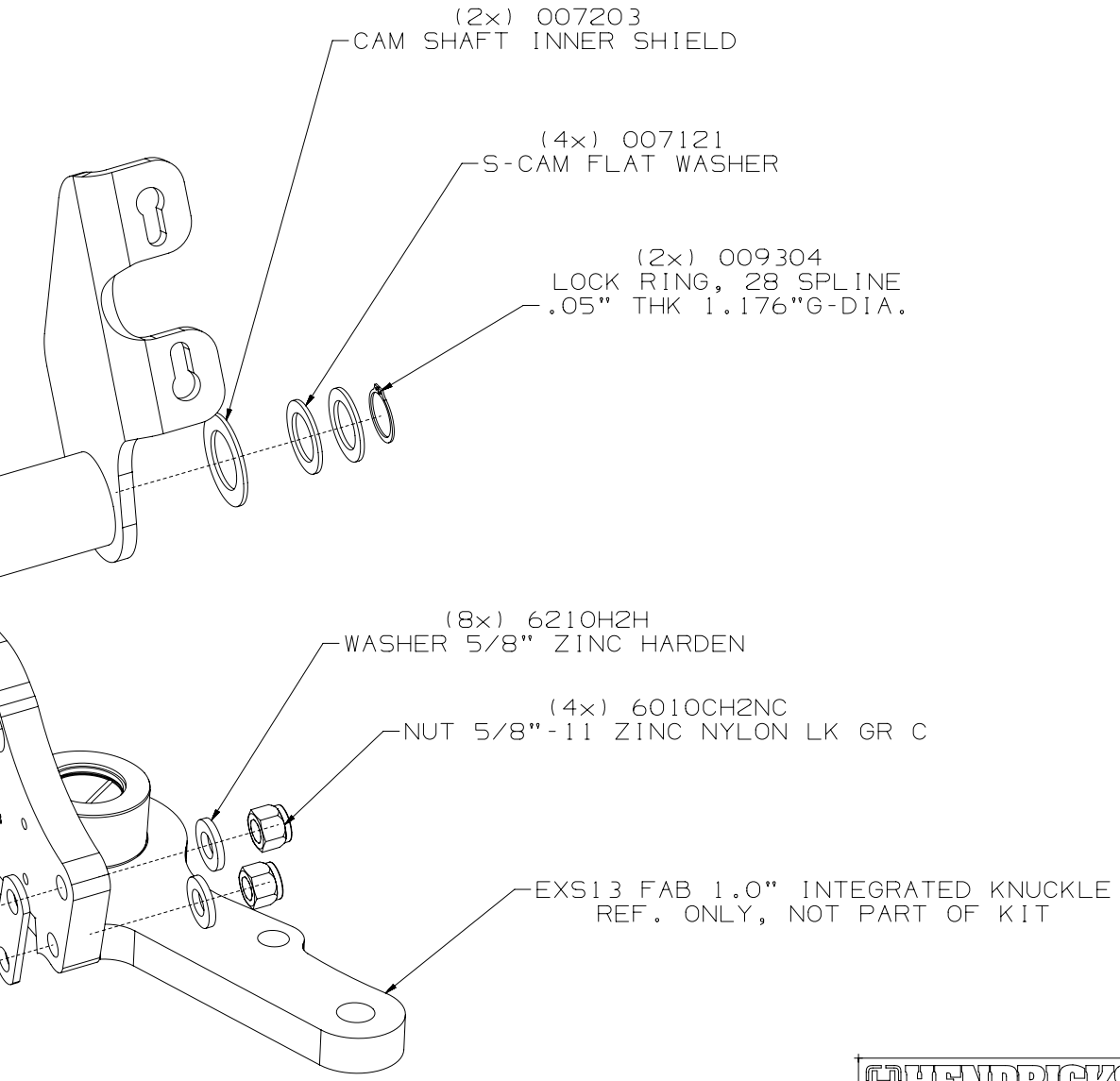

HENDRICKSON Auxiliary Axle Systems

PRODUCTION

Copyright © 2020 Hendrickson, All Rights Reserved.

THIS PRINT REMAINS THE PROPERTY OF HENDRICKSON SUSPENSION SYSTEMS. ALL INFORMATION CONTAINED THEREON IS CONFIDENTIAL. IT IS LOANED, SUBJECT TO RETURN ON DEMAND, AND ON EXPRESS CONDITION THAT IT IS NOT TO BE COPIED OR USED DIRECTLY OR INDIRECTLY FOR ANY PURPOSE OTHER THAN THE PURPOSE FOR WHICH IT HAS BEEN LOANED TO YOU.

CAD — CAD FILE UPDATE ON CAD SYSTEM ONLY!

METRIC — UNLESS OTHERWISE NOTED, DIMENSIONS AND TOLERANCES ARE DEFINED IN MILLIMETERS IN ACCORDANCE WITH ASME STANDARD Y14.5M - 1994

DRAWN BY GUNTERMANN	DATE 05-13-20	MAKE FROM .	CUSTOMER ALL
CHECKED BY SLONAKER	DATE 05-13-20	FOR MACHINING SEE .	SUSPENSION TYPE .
ENG. APPROVAL GUNTERMANN	DATE 05-13-20	FOR ASSEMBLY SEE .	REF. LAYOUT .
MFG. APPROVAL .	DATE .	REPLACES .	REF. BOM .
Q.C. APPROVAL .	DATE .	EQUIP. .	ORIG. MFG. DWG. .

DESCRIPTION

BRAKE HARDWARE KIT 15X4, FAB 1.0" INTEGRATED KNUCKLE INSTALL DWG

MODEL WEIGHT	PART/DWG NO.	SHEET NO.
63.2 LBS.	017449-1501	1 OF 1
SCALE 1:1		DWG. SIZE D

THIS DOCUMENT CONTAINS TECHNOLOGY SUBJECT TO THE U.S. EXPORT ADMINISTRATION REGULATIONS (15 CFR PARTS 730-774) OR U.S. INTERNATIONAL TRAFFIC IN ARMS REGULATIONS (22 CFR PARTS 121-130). PRIOR U.S. GOVERNMENT AUTHORIZATION IS REQUIRED TO RELEASE OR TRANSFER THIS TECHNOLOGY TO A FOREIGN PERSON EITHER IN THE UNITED STATES OR IN A FOREIGN COUNTRY.

ITEM	PART NUMBER	DESCRIPTION	QTY
1	017449-2000	BRAKE HARDWARE KIT FAB - 1.25IN THICK WW301 LINING, LOCKSTRAIGHT	1

NOTES:
1. 5/8"-11 BOLT TORQUE SPEC: 160-180 FT-LBS.
2. APPLY ANTI-SEIZE LUBRICANT 360 DEGREES AROUND CAM TUBE ON SURFACE SPECIFIED AND ON THE S-CAM SPLINES.
3. KIT CONTAINS PARTS FOR BOTH LEFT AND RIGHT HAND ASSEMBLIES (LEFT HAND ASSEMBLY SHOWN).

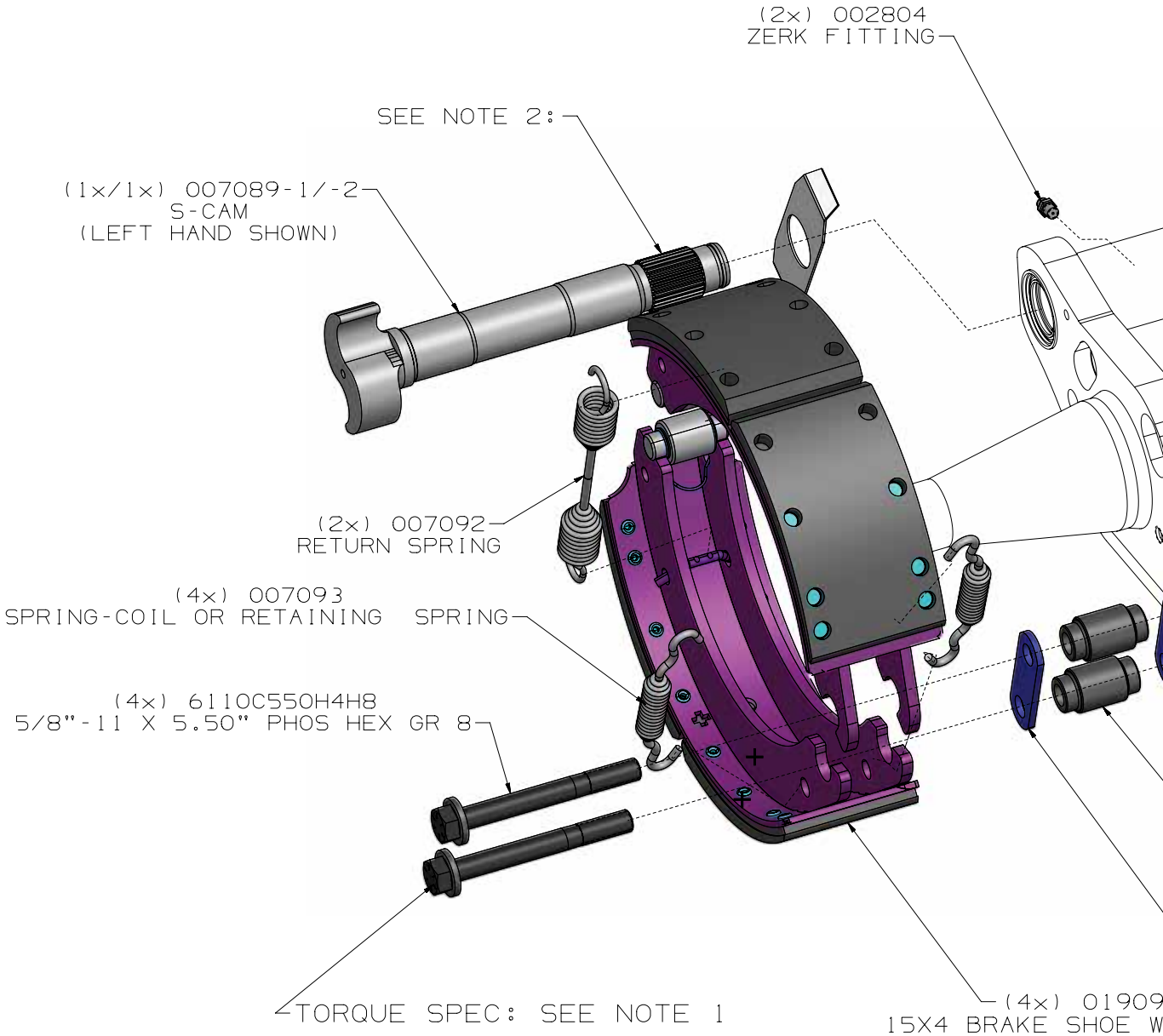

REV	ZONE	DESCRIPTION	BY / DATE	CHK / DATE	ENG / DATE	CN
A		RELEASED FOR PRODUCTION	JAG 10-13-20	JHS 10-13-20	JAG 10-13-20	20-0 753

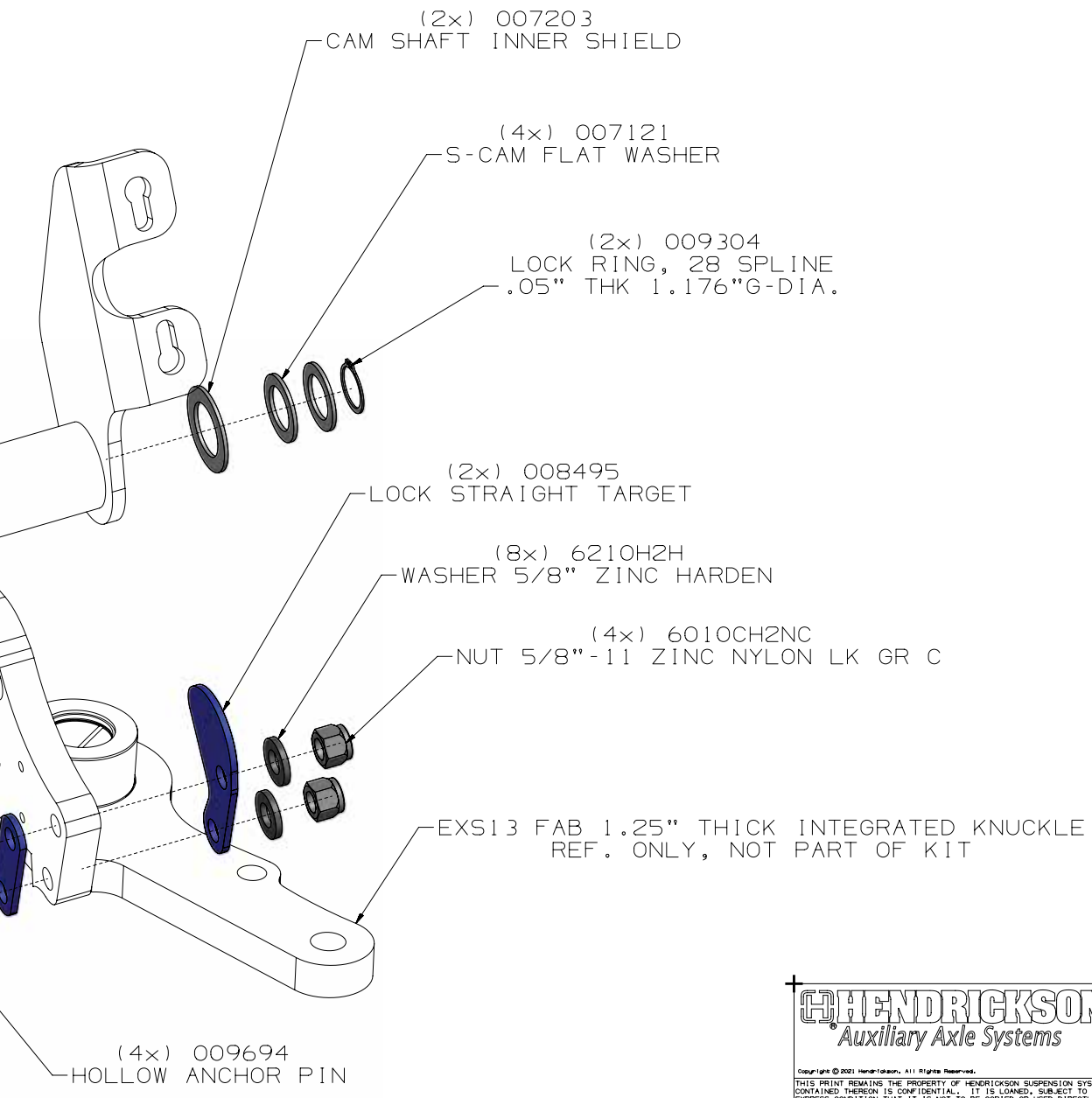

HENDRICKSON Auxiliary Axle Systems

PRODUCTION

Copyright © 2021 Hendrickson. All Rights Reserved.

THIS PRINT REMAINS THE PROPERTY OF HENDRICKSON SUSPENSION SYSTEMS. ALL INFORMATION CONTAINED THEREON IS CONFIDENTIAL. IT IS LOANED, SUBJECT TO RETURN ON DEMAND, AND ON EXPRESS CONDITION THAT IT IS NOT TO BE COPIED OR USED DIRECTLY OR INDIRECTLY FOR ANY PURPOSE OTHER THAN THE PURPOSE FOR WHICH IT HAS BEEN LOANED TO YOU.

CAD — CAD FILE UPDATE ON CAD SYSTEM ONLY!

METRIC — UNLESS OTHERWISE NOTED, DIMENSIONS AND TOLERANCES ARE DEFINED IN MILLIMETERS IN ACCORDANCE WITH ASME STANDARD Y14.5M - 1994

DRAWN BY: GUNTERMANN	DATE: 10-13-20	MAKE FROM: .	CUSTOMER: ALL
CHECKED BY: SLONAKER	DATE: 10-13-20	FOR MACHINING SEE: .	SUSPENSION TYPE: .
ENG. APPROVAL: GUNTERMANN	DATE: 10-13-20	FOR ASSEMBLY SEE: .	REF. LAYOUT: .
MFG. APPROVAL: .	DATE: .	REPLACES: .	REF. BOM: .
Q.C. APPROVAL: .	DATE: .	EQUIP.: .	ORIG. MFG. DWG.: .

DESCRIPTION: BRAKE HARDWARE KIT 15X4, FAB 1.25" INTEGRATED KNUCKLE INSTALL DWG

MODEL WEIGHT	PART/DWG NO.	SHEET NO.
63.2 LBS.	017449-2001	1 OF 1
SCALE 1:1		DWG. SIZE D

THIS DOCUMENT CONTAINS TECHNOLOGY SUBJECT TO THE U.S. EXPORT ADMINISTRATION REGULATIONS (15 CFR PARTS 730-774) OR U.S. INTERNATIONAL TRAFFIC IN ARMS REGULATIONS (22 CFR PARTS 121-130). PRIOR U.S. GOVERNMENT AUTHORIZATION IS REQUIRED TO RELEASE OR TRANSFER THIS TECHNOLOGY TO A FOREIGN PERSON EITHER IN THE UNITED STATES OR IN A FOREIGN COUNTRY.

ITEM	PART NUMBER	DESCRIPTION	QTY
1	017449-1400	BRAKE HARDWARE KIT 15X4 CAST INTEGRATED, WW301 LINING	1

NOTES:
1. 1/2"-13 BOLT TORQUE SPEC: 72-88 FT/LBS.
2. APPLY ANTI-SEIZE LUBRICANT 360 DEGREES AROUND CAM TUBE ON SURFACE SPECIFIED.
3. APPLY ANTI-SEIZE LUBRICANT 360 DEGREES AROUND THE S-CAM SPLINES.
4. KIT CONTAINS PARTS FOR BOTH LEFT AND RIGHT HAND ASSEMBLIES (LEFT HAND ASSEMBLY SHOWN).

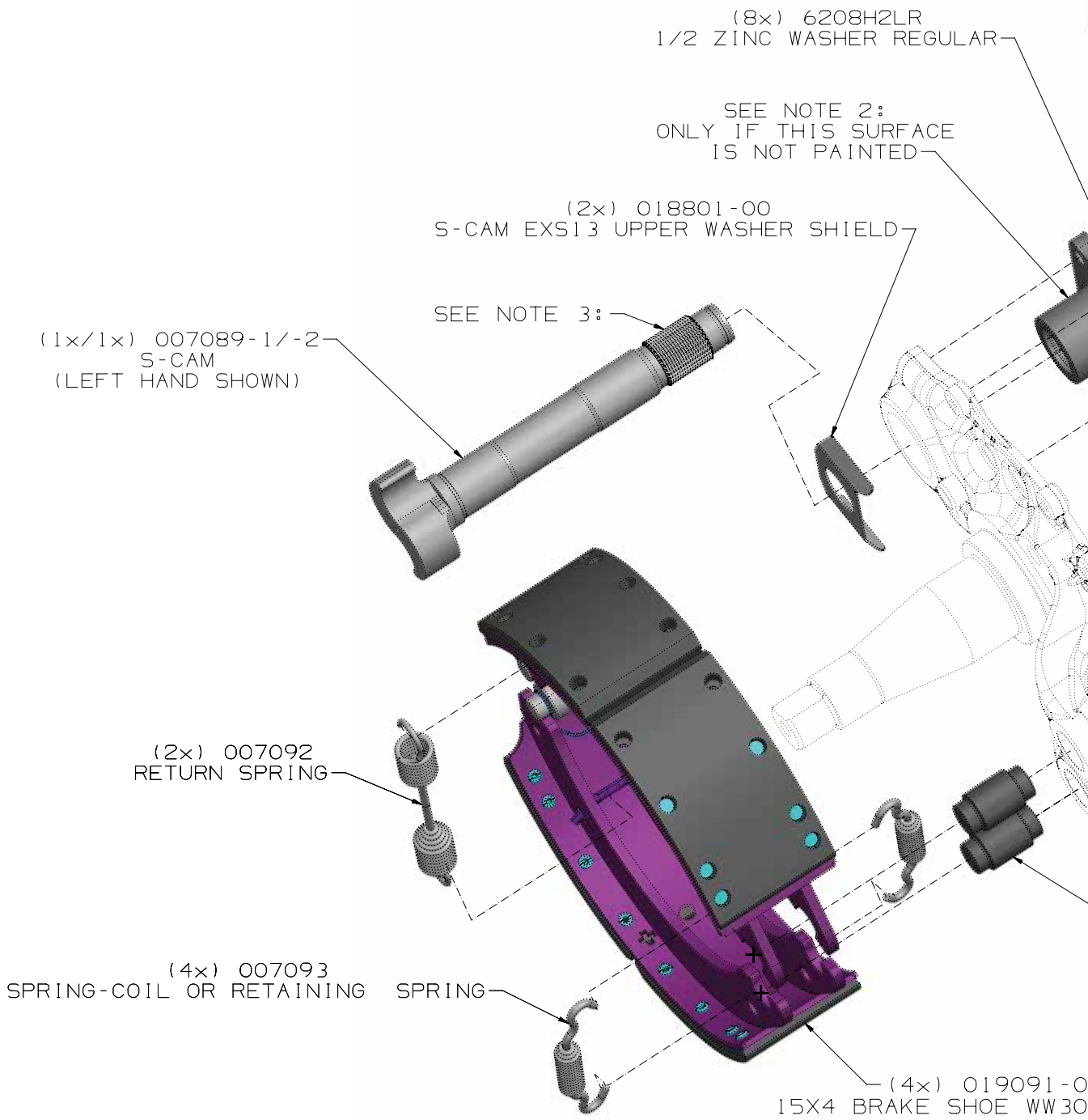

REV	ZONE	DESCRIPTION	BY / DATE	CHK / DATE	ENG / DATE	CN
A		RELEASED FOR PRODUCTION	JAG 05-13-20	JHS 05-13-20	JAG 05-13-20	20-0314
B		NOTE: IF SURFACE NOT PAINTED	SAK 02-23-21	JHS 02-23-21	AP 02-23-21	21-0161

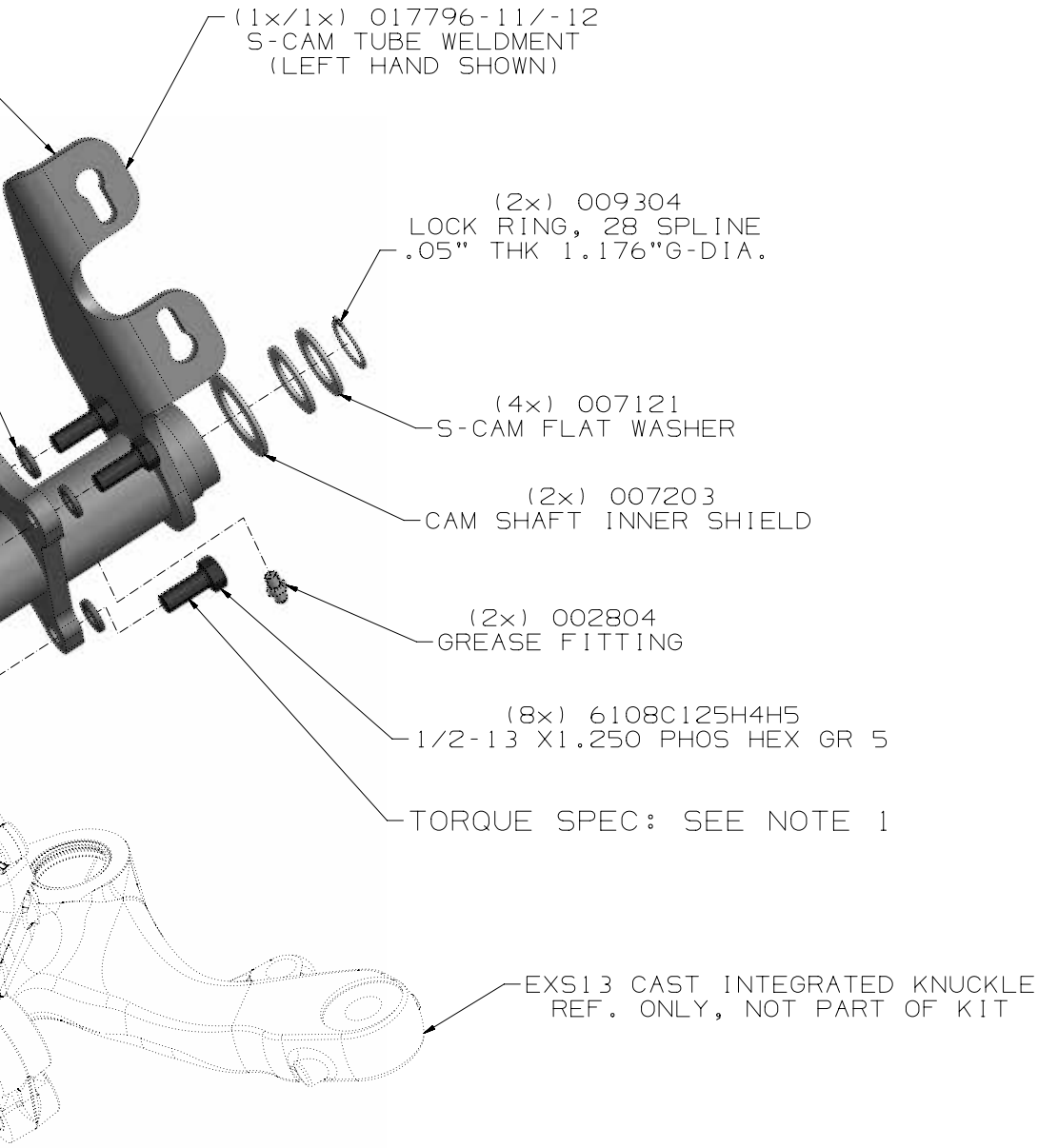

O
1 LINING

HENDRICKSON
Auxiliary Axle Systems

PRODUCTION

Copyright © 2021 Hendrickson. All Rights Reserved.

THIS PRINT REMAINS THE PROPERTY OF HENDRICKSON SUSPENSION SYSTEMS. ALL INFORMATION CONTAINED THEREON IS CONFIDENTIAL. IT IS LOANED, SUBJECT TO RETURN ON DEMAND, AND ON EXPRESS CONDITION THAT IT IS NOT TO BE COPIED OR USED DIRECTLY OR INDIRECTLY FOR ANY PURPOSE OTHER THAN THE PURPOSE FOR WHICH IT HAS BEEN LOANED TO YOU.

CAD — CAD FILE UPDATE ON CAD SYSTEM ONLY!

METRIC — UNLESS OTHERWISE NOTED, DIMENSIONS AND TOLERANCES ARE DEFINED IN MILLIMETERS IN ACCORDANCE WITH ASME STANDARD Y14.5M - 1994

DRAWN BY: GUNTERMANN	DATE: 05-13-20	MAKE FROM: .	CUSTOMER: ALL
CHECKED BY: SLONAKER	DATE: 05-13-20	FOR MACHINING SEE: .	SUSPENSION TYPE: .
ENG. APPROVAL: GUNTERMANN	DATE: 05-13-20	FOR ASSEMBLY SEE: .	REF. LAYOUT: .
MFG. APPROVAL: .	DATE: .	REPLACES: .	REF. BOM: .
Q.C. APPROVAL: .	DATE: .	EQUIP.: .	ORIG. MFG. DWG.: .

DESCRIPTION: BRAKE HARDWARE KIT CAST INTEGRATED KNUCKLE INSTALL DWG

MODEL WEIGHT	PART/DWG NO.	SHEET NO.
81.7 LBS.	017449-1401	1 OF 1
SCALE 1:1		DWG. SIZE D

THIS DOCUMENT CONTAINS TECHNOLOGY SUBJECT TO THE U.S. EXPORT ADMINISTRATION REGULATIONS (15 CFR PARTS 730-774) OR U.S. INTERNATIONAL TRAFFIC IN ARMS REGULATIONS (22 CFR PARTS 121-130). PRIOR U.S. GOVERNMENT AUTHORIZATION IS REQUIRED TO RELEASE OR TRANSFER THIS TECHNOLOGY TO A FOREIGN PERSON EITHER IN THE UNITED STATES OR IN A FOREIGN COUNTRY.

ITEM	PART NUMBER	DESCRIPTION	QTY
1	014035-1	ANCHOR PLATE AIR DISCBENDIX K112798 TABS (LH)	1
	014035-2	ANCHOR PLATE AIR DISCBENDIX K112799 TABS (RH)	1
2	018344-00	DRAWING/MODEL-L/S TARGET PLATE EXS13, CAST BOLT ON KNUCKLE	2
3	6010CH2FC	5/8-11 UNC ZINC FLANGE NUT GR C	8
4	6110C250H4H8	5/8-11 X 2.500 PHOS HEX GR 8	8
5	6110C300H4H8	5/8-11 X 3.000 PHOS HEX GR 8	6
6	6210H2H	5/8 ZINC WASHER HARDENED	10

FOR CO
(
5/8-11

NOTE:

ITEM	PART NUMBER	REMARKS
1	014035-1	VEHICLE LEFT HAND SIDE SHOWN
	014035-2	VEHICLE RIGHT HAND SIDE OPPOSITE

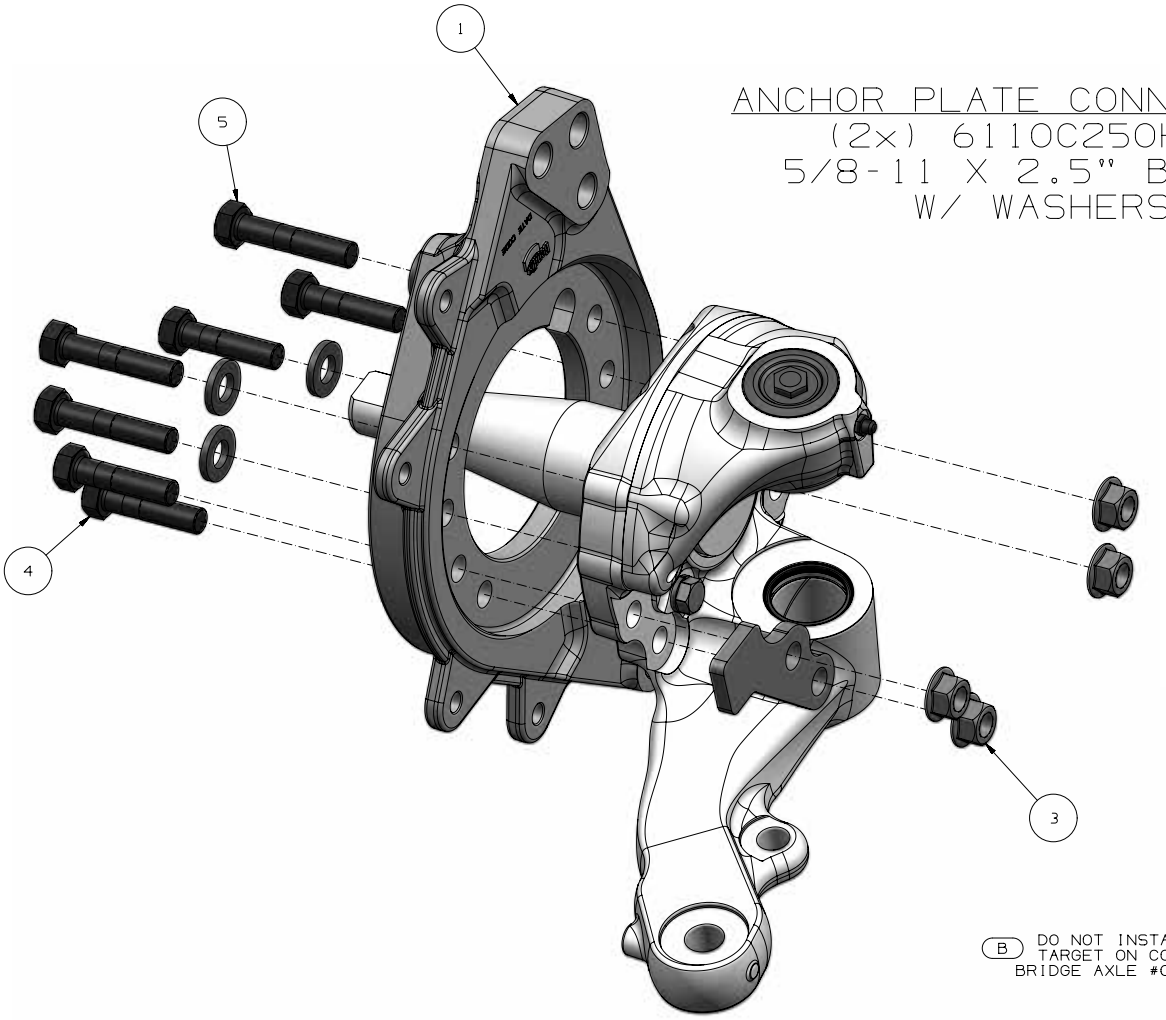

ANCHOR PLATE CONNECTION:
(2x) 6110C250H4H8
5/8-11 X 2.5" BOLT,
W/ WASHERS

(B) DO NOT INSTALL L/S TARGET ON CONTECH BRIDGE AXLE #019196-00

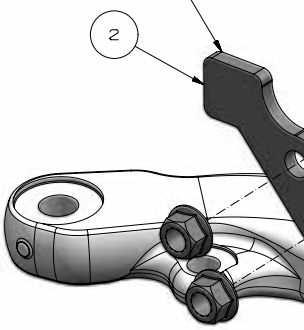

5/8-11 TORQUE SPEC: 170-205 Ft-Lbs.

NOTES:
1. DO NOT INSTALL L/S TARGET (018344-00) WHEN
(B) INSTALLING HDWR KIT ON CONTECH
BRIDGE AXLE #019196-00

REV	ZONE	DESCRIPTION	BY / DATE	CHK / DATE	ENG / DATE	CN
A		RELEASED FOR PRODUCTION	SAK 06-20-19	A.W 06-20-19	A.W 06-20-19	19-0457
B	C8	ADDED NOTES	WRM 01-31-20	KDM 01-31-20	JHS 01-31-20	20-0101

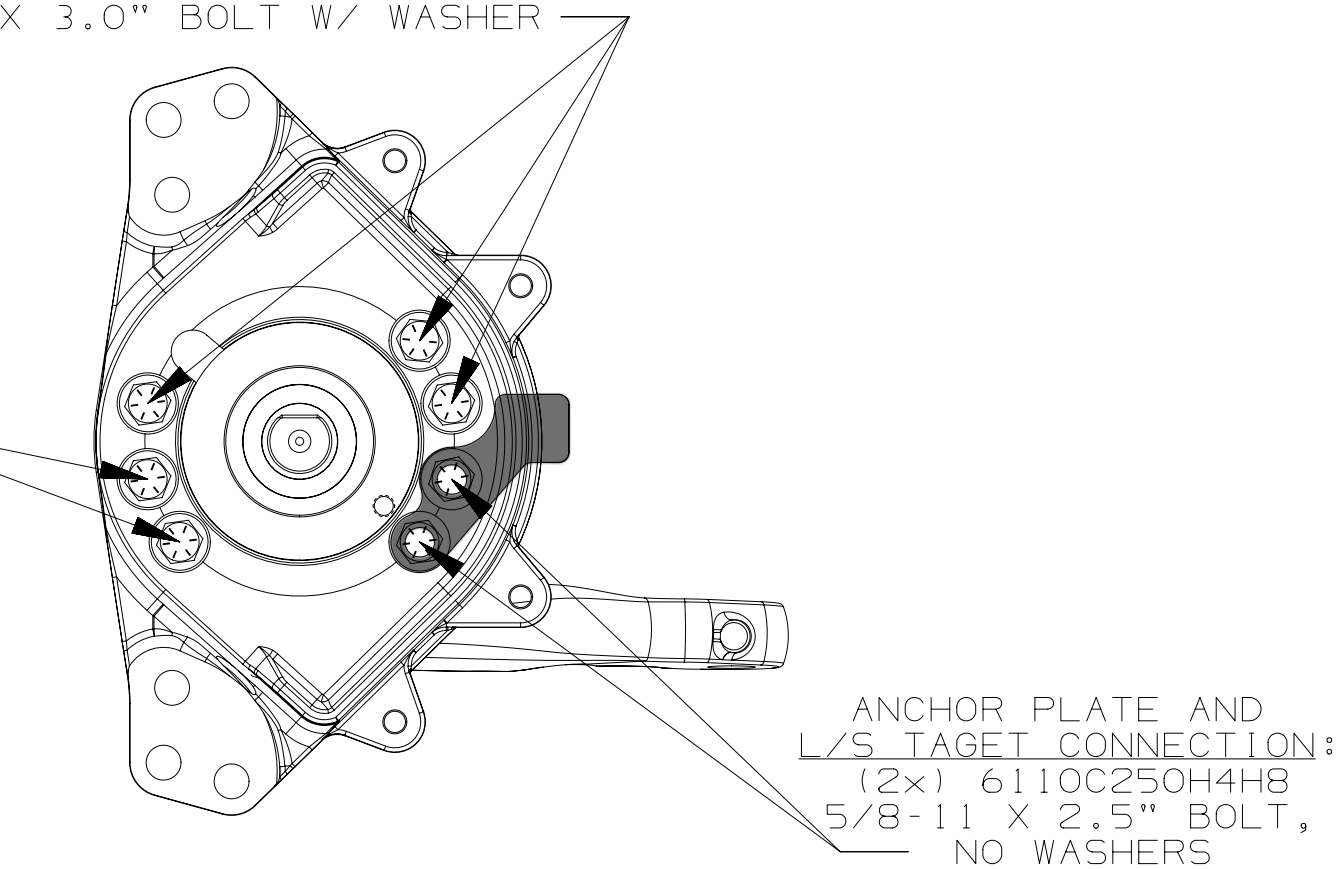

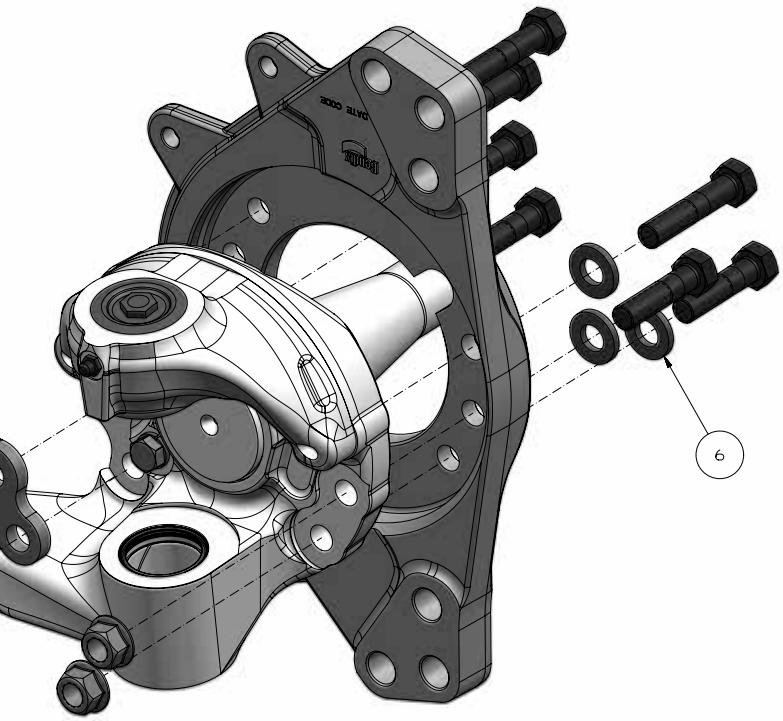

HENDRICKSON
Auxiliary Axle Systems

PRODUCTION

Copyright © 2020 Hendrickson. All Rights Reserved.

THIS PRINT REMAINS THE PROPERTY OF HENDRICKSON SUSPENSION SYSTEMS. ALL INFORMATION CONTAINED THEREON IS CONFIDENTIAL. IT IS LOANED, SUBJECT TO RETURN ON DEMAND, AND ON EXPRESS CONDITION THAT IT IS NOT TO BE COPIED OR USED DIRECTLY OR INDIRECTLY FOR ANY PURPOSE OTHER THAN THE PURPOSE FOR WHICH IT HAS BEEN LOANED TO YOU.

CAD — CAD FILE UPDATE ON CAD SYSTEM ONLY!

METRIC — UNLESS OTHERWISE NOTED, DIMENSIONS AND TOLERANCES ARE DEFINED IN MILLIMETERS IN ACCORDANCE WITH ASME STANDARD Y14.5M - 1994

DRAWN BY S.KOHLER	DATE 06-20-19	MAKE FROM .	CUSTOMER ALL
CHECKED BY WESTNEDGE	DATE 06-20-19	FOR MACHINING SEE .	SUSPENSION TYPE .
ENG. APPROVAL WESTNEDGE	DATE 06-20-19	FOR ASSEMBLY SEE .	REF. LAYOUT .
MFG. APPROVAL .	DATE .	REPLACES .	REF. BOM .
Q.C. APPROVAL .	DATE .	EQUIP. .	ORIG. MFG. DWG. .

DESCRIPTION

DISC BRAKE HARDWARE KIT
CAST KNUCKLE INSTALL DWG.

MODEL WEIGHT	PART/DWG NO.	SHEET NO.
.00 LBS.	017449-0401	1 OF 1
SCALE 1:1		DWG. SIZE D

THIS DOCUMENT CONTAINS TECHNOLOGY SUBJECT TO THE U.S. EXPORT ADMINISTRATION REGULATIONS (15 CFR PARTS 730-774) OR U.S. INTERNATIONAL TRAFFIC IN ARMS REGULATIONS (22 CFR PARTS 121-130). PRIOR U.S. GOVERNMENT AUTHORIZATION IS REQUIRED TO RELEASE OR TRANSFER THIS TECHNOLOGY TO A FOREIGN PERSON EITHER IN THE UNITED STATES OR IN A FOREIGN COUNTRY.

NOTE:
1. 9/16-12 TORQUE SPEC: 103.5-126.5 Ft-Lbs.
2. KIT CONTAINS PARTS FOR BOTH LEFT AND RIGHT HAND SIDES.
3. ITEMS 1, 2 AND 3 NOT SHOWN.

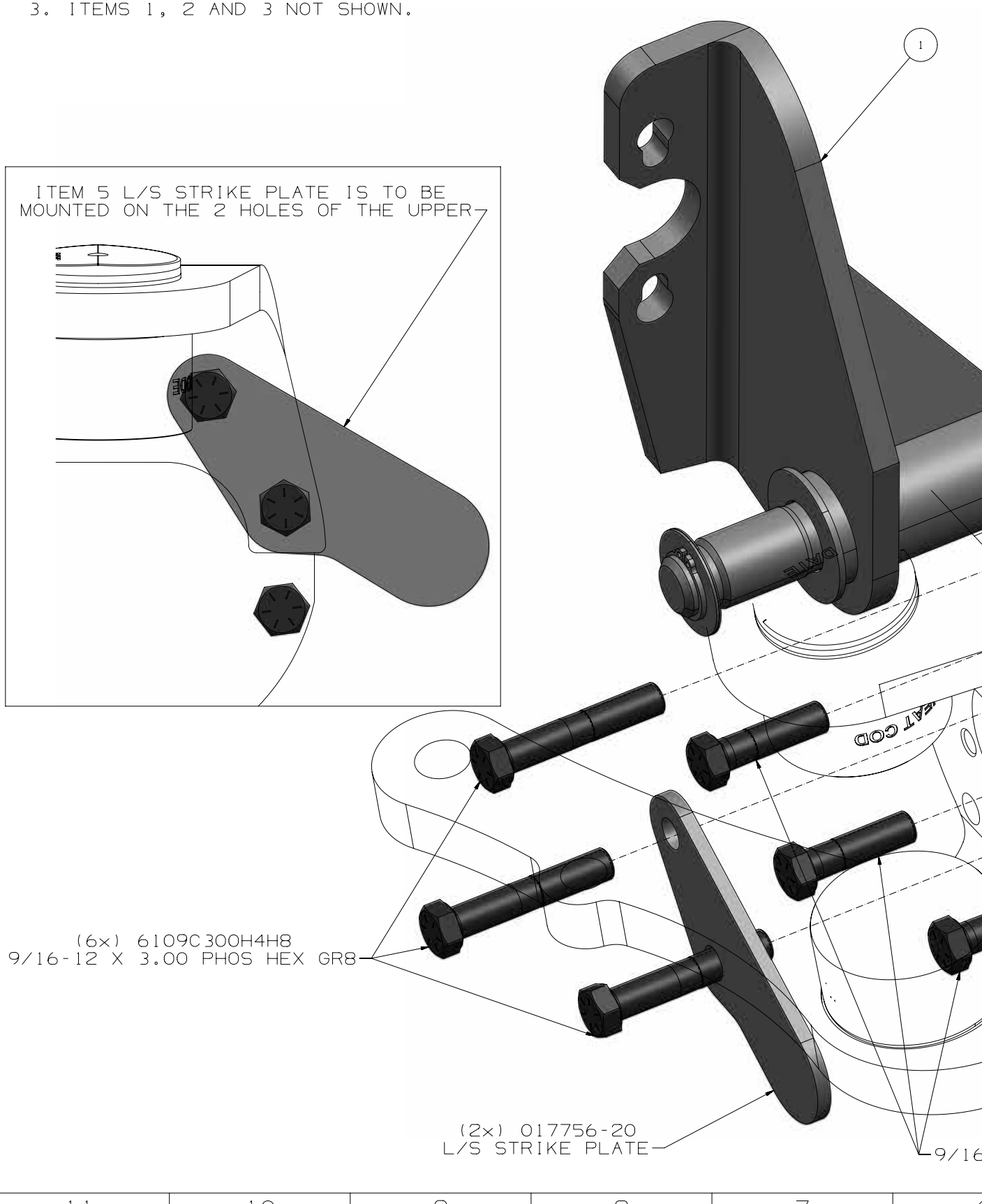

REV	ZONE	DESCRIPTION	BY / DATE	CHK / DATE	ENG / DATE	CN
A		RELEASED FOR PRODUCTION	SAK 06-20-19	A.W 06-20-19	A.W 06-20-19	19-0457
B		SHIM 001764-1 QTY WAS 10	SAK 02-11-20	A.W 02-11-20	A.W 02-11-20	20-0140

ITEM	PART NUMBER	DESCRIPTION	QTY
1	017449-0500	BRAKE HARDWARE KIT FAB 10K BOLT-ON	1

NOTE: BRAKE ASSEMBLY	
PART NUMBER	REMARKS
005896-1	VEHICLE LEFT HAND SIDE SHOWN
005896-2	VEHICLE RIGHT HAND SIDE OPPOSITE

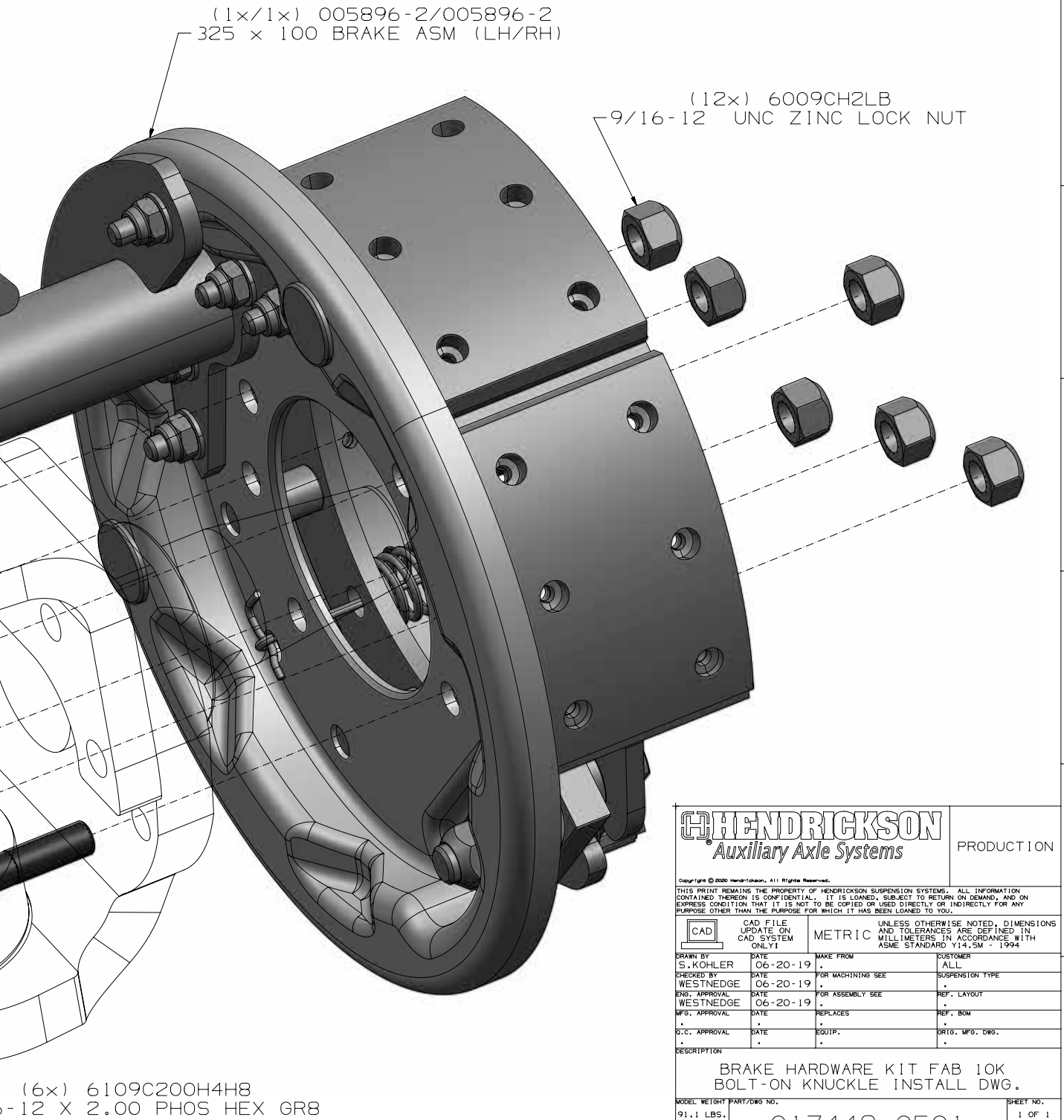

HENDRICKSON Auxiliary Axle Systems

PRODUCTION

Copyright © 2020 Hendrickson, All Rights Reserved.

THIS PRINT REMAINS THE PROPERTY OF HENDRICKSON SUSPENSION SYSTEMS. ALL INFORMATION CONTAINED THEREON IS CONFIDENTIAL. IT IS LOANED, SUBJECT TO RETURN ON DEMAND, AND ON EXPRESS CONDITION THAT IT IS NOT TO BE COPIED OR USED DIRECTLY OR INDIRECTLY FOR ANY PURPOSE OTHER THAN THE PURPOSE FOR WHICH IT HAS BEEN LOANED TO YOU.

CAD — CAD FILE UPDATE ON CAD SYSTEM ONLY!

METRIC — UNLESS OTHERWISE NOTED, DIMENSIONS AND TOLERANCES ARE DEFINED IN MILLIMETERS IN ACCORDANCE WITH ASME STANDARD Y14.5M - 1994

DRAWN BY S.KOHLER	DATE 06-20-19	MAKE FROM .	CUSTOMER ALL
CHECKED BY WESTNEDGE	DATE 06-20-19	FOR MACHINING SEE .	SUSPENSION TYPE .
ENG. APPROVAL WESTNEDGE	DATE 06-20-19	FOR ASSEMBLY SEE .	REF. LAYOUT .
MFG. APPROVAL .	DATE .	REPLACES .	REF. BOM .
Q.C. APPROVAL .	DATE .	EQUIP. .	ORIG. MFG. DWG. .

DESCRIPTION: BRAKE HARDWARE KIT FAB 10K BOLT-ON KNUCKLE INSTALL DWG.

MODEL WEIGHT	PART/DWG NO.	SHEET NO.
91.1 LBS.	017449-0501	1 OF 1
SCALE 1:1		DWG. SIZE D

THIS DOCUMENT CONTAINS TECHNOLOGY SUBJECT TO THE U.S. EXPORT ADMINISTRATION REGULATIONS (15 CFR PARTS 730-774) OR U.S. INTERNATIONAL TRAFFIC IN ARMS REGULATIONS (22 CFR PARTS 121-130). PRIOR U.S. GOVERNMENT AUTHORIZATION IS REQUIRED TO RELEASE OR TRANSFER THIS TECHNOLOGY TO A FOREIGN PERSON EITHER IN THE UNITED STATES OR IN A FOREIGN COUNTRY.

ITEM	PART NUMBER	DESCRIPTION	QTY
1	018344-00	DRAWING/MODEL-L/S TARGET PLATE EXS13, CAST BOLT ON KNUCKLE	2
2	019779-01	TORQUE PLATE, MERITOR EXH201 ADB, FF 90 DEG, LH (3215H2894)	1
3	019779-02	TORQUE PLATE, MERITOR EXH201 ADB, FF 90 DEG, RH (3215J2896)	1
4	6010CH2FC	5/8-11 UNC ZINC FLANGE NUT GR C	8
5	6110C250H4H8	5/8-11 X 2.500 PHOS HEX GR 8	8
6	6110C300H4H8	5/8-11 X 3.000 PHOS HEX GR 8	6
7	6210H2H	5/8 ZINC WASHER HARDENED	10

FOR CON
(3
5/8-11 X

ANCHOR PLATE CONNECTION:
(2x) 6110C250H4H8
5/8-11 X 2.5" BOLT,
W/ WASHERS

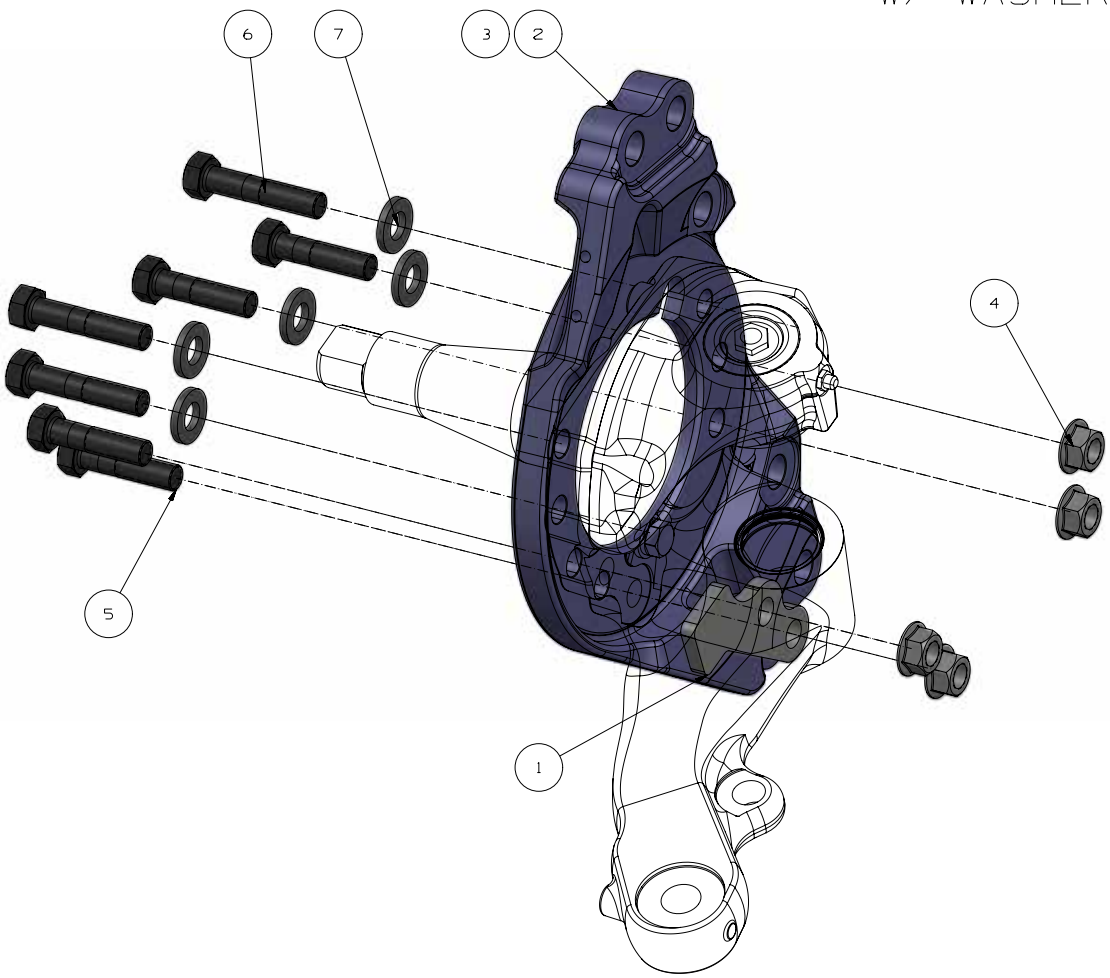

5/8-11 TORQUE SPEC:
170-205 Ft-Lbs.

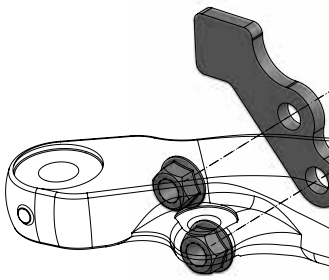

REV	ZONE	DESCRIPTION	BY / DATE	CHK / DATE	ENG / DATE	CN
A		RELEASED FOR PRODUCTION	JAB 08-06-19	JAG 08-06-19	A.W 08-06-19	19-0 552
B		017507-01/02 TORQUE PLATE REPLACE BY 019779-01/02	JAG 05-06-21	JHS 05-06-21	JAG 05-06-21	21-0 115
C		REMOVED TABLE REFERENCE TO PN 017507-01/02	JAG 11-12-21	JHS 11-12-21	JAG 11-12-21	21-0 648

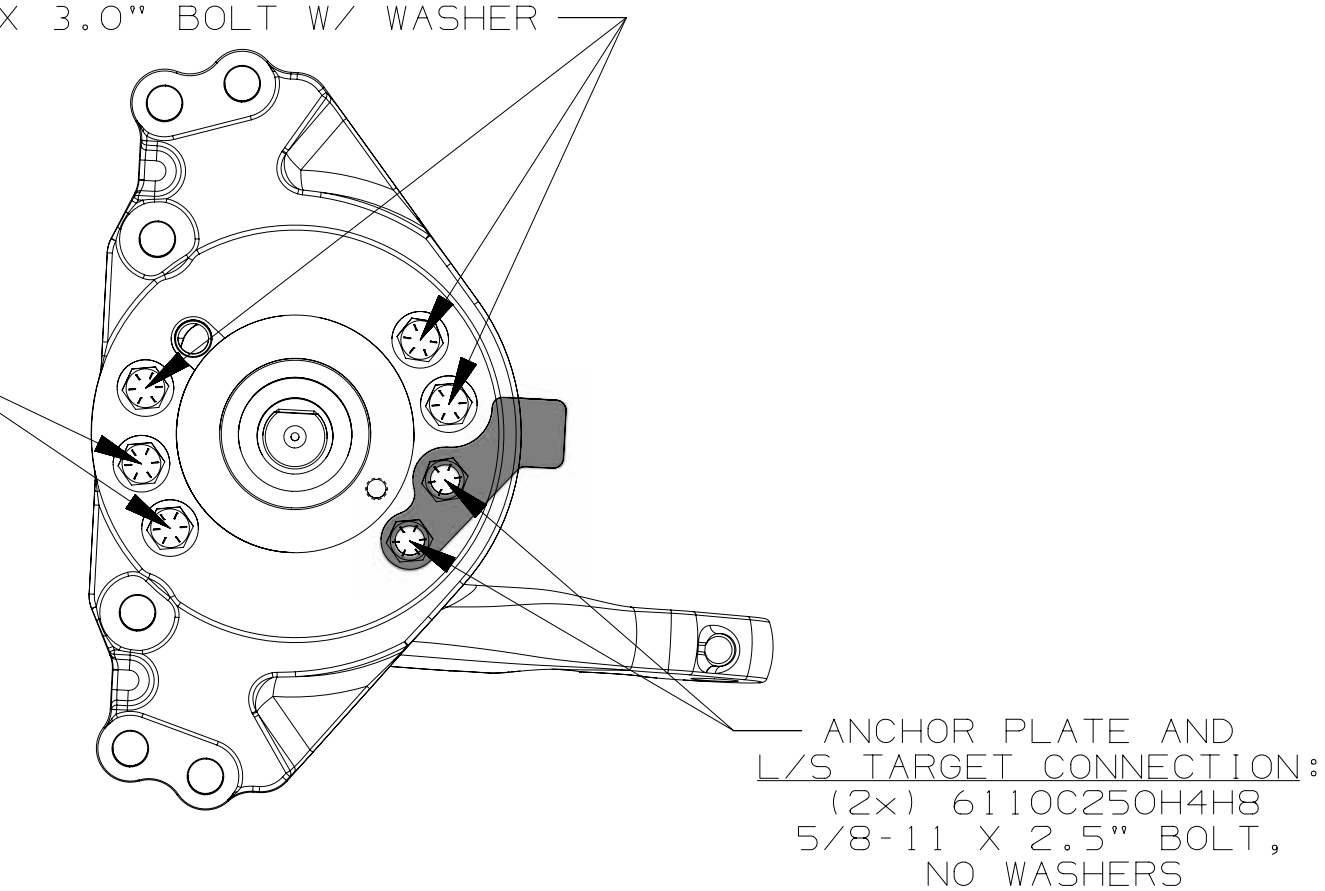

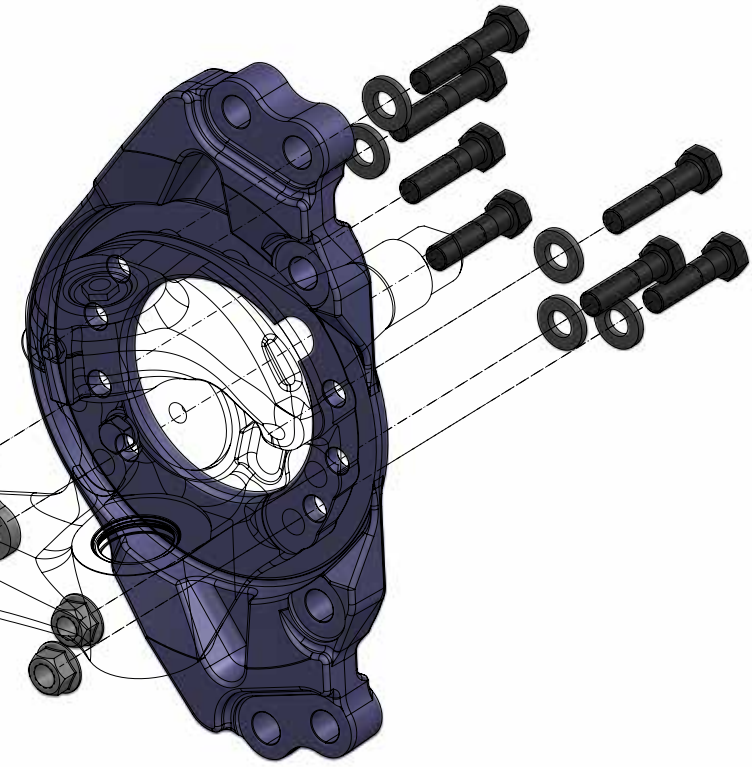

HENDRICKSON Auxiliary Axle Systems

PRODUCTION

Copyright © 2021 Hendrickson. All Rights Reserved.

THIS PRINT REMAINS THE PROPERTY OF HENDRICKSON SUSPENSION SYSTEMS. ALL INFORMATION CONTAINED THEREON IS CONFIDENTIAL. IT IS LOANED, SUBJECT TO RETURN ON DEMAND, AND ON EXPRESS CONDITION THAT IT IS NOT TO BE COPIED OR USED DIRECTLY OR INDIRECTLY FOR ANY PURPOSE OTHER THAN THE PURPOSE FOR WHICH IT HAS BEEN LOANED TO YOU.

CAD — CAD FILE UPDATE ON CAD SYSTEM ONLY!

METRIC — UNLESS OTHERWISE NOTED, DIMENSIONS AND TOLERANCES ARE DEFINED IN MILLIMETERS IN ACCORDANCE WITH ASME STANDARD Y14.5M - 1994

DRAWN BY J.BIRO	DATE 08-06-19	MAKE FROM .	CUSTOMER ALL
CHECKED BY GUNTERMANN	DATE 08-06-19	FOR MACHINING SEE .	SUSPENSION / PROGRAM .
ENG. APPROVAL WESTNEDGE	DATE 08-06-19	FOR ASSEMBLY SEE .	REF. LAYOUT .
MFG. APPROVAL .	DATE .	REPLACES .	REF. BOM .
Q.C. APPROVAL .	DATE .	EQUIP. .	ORIG. MFG. DWG. .

DESCRIPTION

DISC BRAKE HARDWARE KIT (MERITOR)
CAST KNUCKLE INSTALL DWG.

MODEL WEIGHT	PART/DWG NO.	SHEET NO.
.00 LBS.	017449-0601	1 OF 1
SCALE 1:2		DWG. SIZE D

THIS DOCUMENT CONTAINS TECHNOLOGY SUBJECT TO THE U.S. EXPORT ADMINISTRATION REGULATIONS (15 CFR PARTS 730-774) OR U.S. INTERNATIONAL TRAFFIC IN ARMS REGULATIONS (22 CFR PARTS 121-130). PRIOR U.S. GOVERNMENT AUTHORIZATION IS REQUIRED TO RELEASE OR TRANSFER THIS TECHNOLOGY TO A FOREIGN PERSON EITHER IN THE UNITED STATES OR IN A FOREIGN COUNTRY.

ITEM	PART NUMBER	DESCRIPTION	QTY
1	002804	GREASE FITTING	2
2	007089-1/2	S-CAM (LH)	1 EA
3	007092	RETURN SPRING	2
4	007093	SPRING - COIL OR RETAINING SPRING	4
5	007121	S-CAM FLAT WASHER	4
6	007203	CAMSHAFT INNER SHIELD	2
7	009304	LOCK RING, 28 SPLINE0.050"THK 1.176"G-DIA	2
8	009307	PIN - ANCHOR	4
9	017420-11/12	CAST INTEGRATED BACKBONE ASM (LH)	1 EA
10	018537-11/12	HD S-CAM TUBE WELDMENT ASM (LH) STAGE 1	1 EA
11	018801-00	S-CAM EXS13 UPPER WASHER SHIELD	2
12	019091-00	BRAKE SHOE ASM, 15 X 4, 13K, WW301 LINING	4
13	6108C125H4H5	1/2-13 X 1.250 PHOS HEX GR 5	8
14	6208H2AR	1/2 ZINC WASHER REGULAR	8

NOTES:
1. 1/2"-13 BOLT TORQUE SPEC: 72-88 F
2. APPLY ANTI-SEIZE LUBRICANT 360 DE SURFACE SPECIFIED.
3. APPLY ANTI-SEIZE LUBRICANT 360 DE
4. KIT CONTAINS PARTS FOR BOTH LEFT (LEFT HAND ASSEMBLY SHOWN).

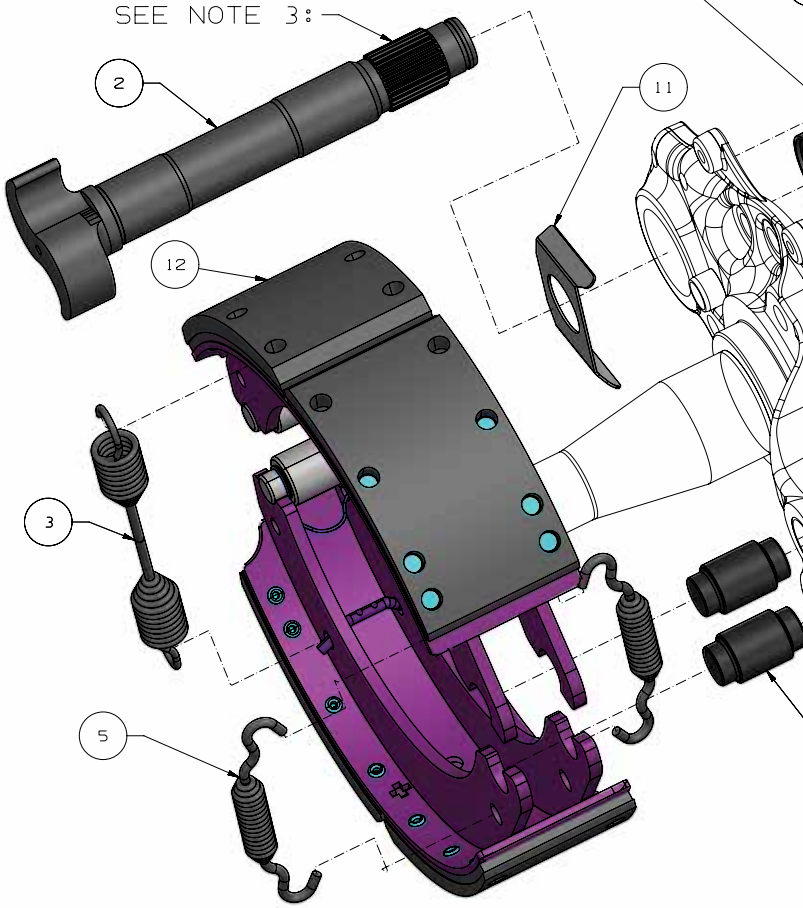

REV	ZONE	DESCRIPTION	BY / DATE	CHK / DATE	ENG / DATE	CN
A		RELEASED FOR PRODUCTION	JLT 11-20-20	JHS 11-20-20	JLT 11-20-20	20-0913
B		ADDED ANTI SEIZE LUBE NOTES	SAK 02-24-21	JHS 02-24-21	AP 02-24-21	21-0161

T/LBS.
GREES AROUND CAM TUBE ON

GREES AROUND THE S-CAM SPLINES.
AND RIGHT HAND ASSEMBLIES

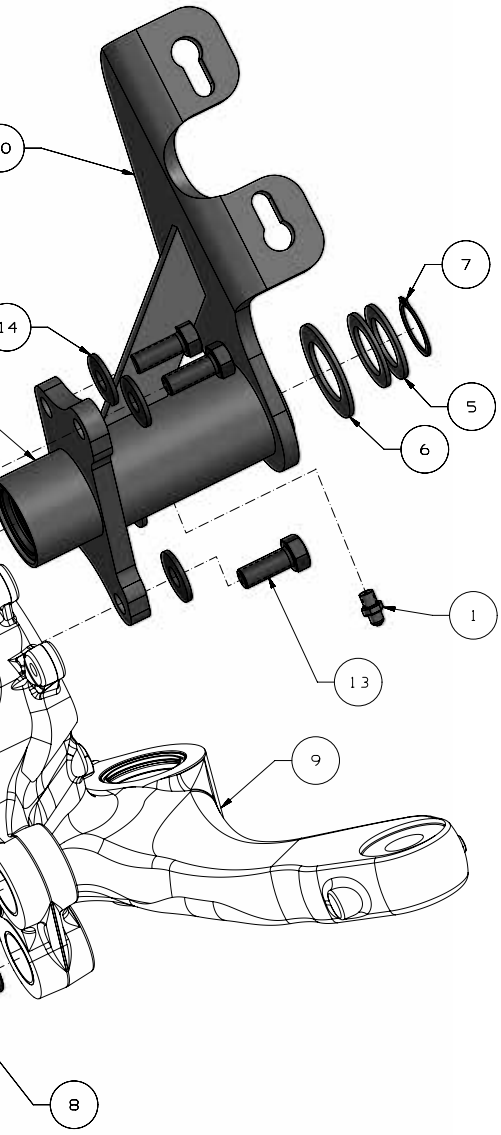

PART NO.	DESCRIPTION	COMMENTS
017449-2300	BRAKE HARDWARE KIT	LH ASM SHOWN, RH OPPOSITE

HENDRICKSON Auxiliary Axle Systems

PRODUCTION

Copyright © 2021 Hendrickson, All Rights Reserved.

THIS PRINT REMAINS THE PROPERTY OF HENDRICKSON SUSPENSION SYSTEMS. ALL INFORMATION CONTAINED THEREON IS CONFIDENTIAL. IT IS LOANED, SUBJECT TO RETURN ON DEMAND, AND ON EXPRESS CONDITION THAT IT IS NOT TO BE COPIED OR USED DIRECTLY OR INDIRECTLY FOR ANY PURPOSE OTHER THAN THE PURPOSE FOR WHICH IT HAS BEEN LOANED TO YOU.

CAD — CAD FILE UPDATE ON CAD SYSTEM ONLY!

METRIC — UNLESS OTHERWISE NOTED, DIMENSIONS AND TOLERANCES ARE DEFINED IN MILLIMETERS IN ACCORDANCE WITH ASME STANDARD Y14.5M - 1994

DRAWN BY: J. TOLLETT	DATE: 11-20-20	MAKE FROM: .	CUSTOMER: ALL
CHECKED BY: SLONAKER	DATE: 11-20-20	FOR MACHINING SEE: .	SUSPENSION TYPE: .
ENG. APPROVAL: J. TOLLETT	DATE: 11-20-20	FOR ASSEMBLY SEE: .	REF. LAYOUT: .
MFG. APPROVAL: .	DATE: .	REPLACES: .	REF. BOM: .
Q.C. APPROVAL: .	DATE: .	EQUIP.: .	ORIG. MFG. DWG.: .

DESCRIPTION: BRAKE HARDWARE KIT HEAVE DUTY CAST KNUCKLE INSTALL DWG

MODEL WEIGHT	PART/DWG NO.	SHEET NO.
.00 LBS.	017449-2301	1 OF 1
SCALE 1:1		DWG. SIZE D

THIS DOCUMENT CONTAINS TECHNOLOGY SUBJECT TO THE U.S. EXPORT ADMINISTRATION REGULATIONS (15 CFR PARTS 730-774) OR U.S. INTERNATIONAL TRAFFIC IN ARMS REGULATIONS (22 CFR PARTS 121-130). PRIOR U.S. GOVERNMENT AUTHORIZATION IS REQUIRED TO RELEASE OR TRANSFER THIS TECHNOLOGY TO A FOREIGN PERSON EITHER IN THE UNITED STATES OR IN A FOREIGN COUNTRY.

ITEM	PART NUMBER	DESCRIPTION	QTY
1	017449-2200	13K ABD22X/ADB22X-LT, CALIPER HARDWARE KIT, M20X2.5-6G 60MM	1

TORQUE SEQUENCE:

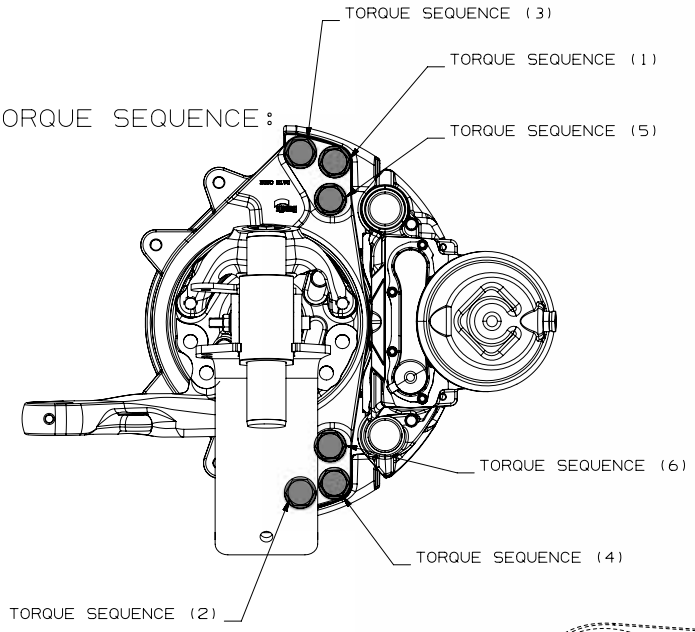

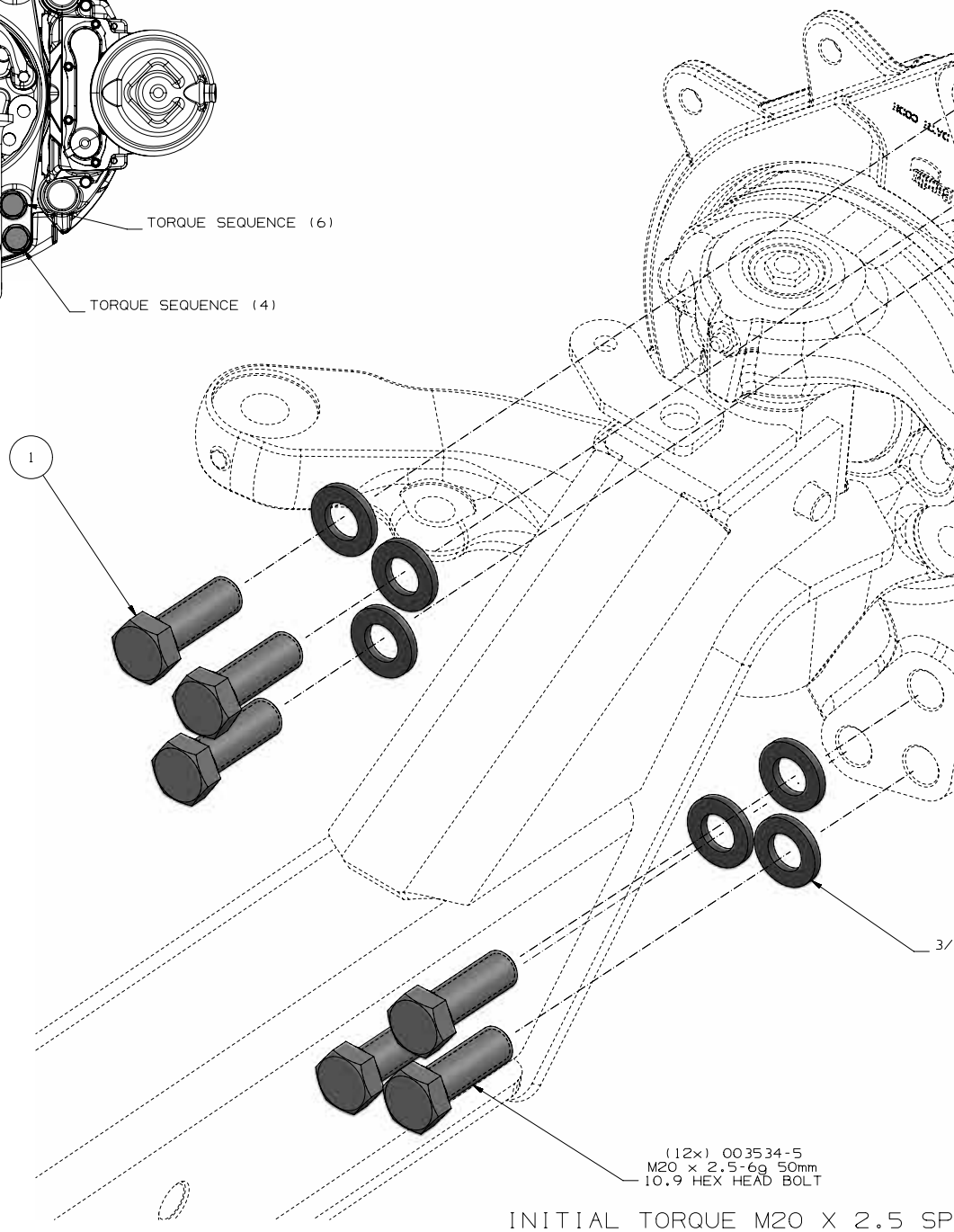

NOTES:

1. KIT CONTAINS PARTS FOR BOTH LEFT AND RIGHT HAND SIDES. VEHICLE LEFT HAND SIDE SHOWN.
2. KIT BOLT LENGTH DESIGNED FOR MOUNTING THRU CALIPER AND 30MM THICK SURFACE.

INITIAL TORQUE M20 X 2.5 SP
FINAL TORQUE M20 X 2.5 SPEC
FOLLOW TORQUE SEQUENC

REV	ZONE	DESCRIPTION	BY / DATE	CHK / DATE	ENG / DATE	CN
A		RELEASED FOR PRODUCTION	SAK 11-12-20	JHS 12-14-20	AP 12-14-20	20-0 889

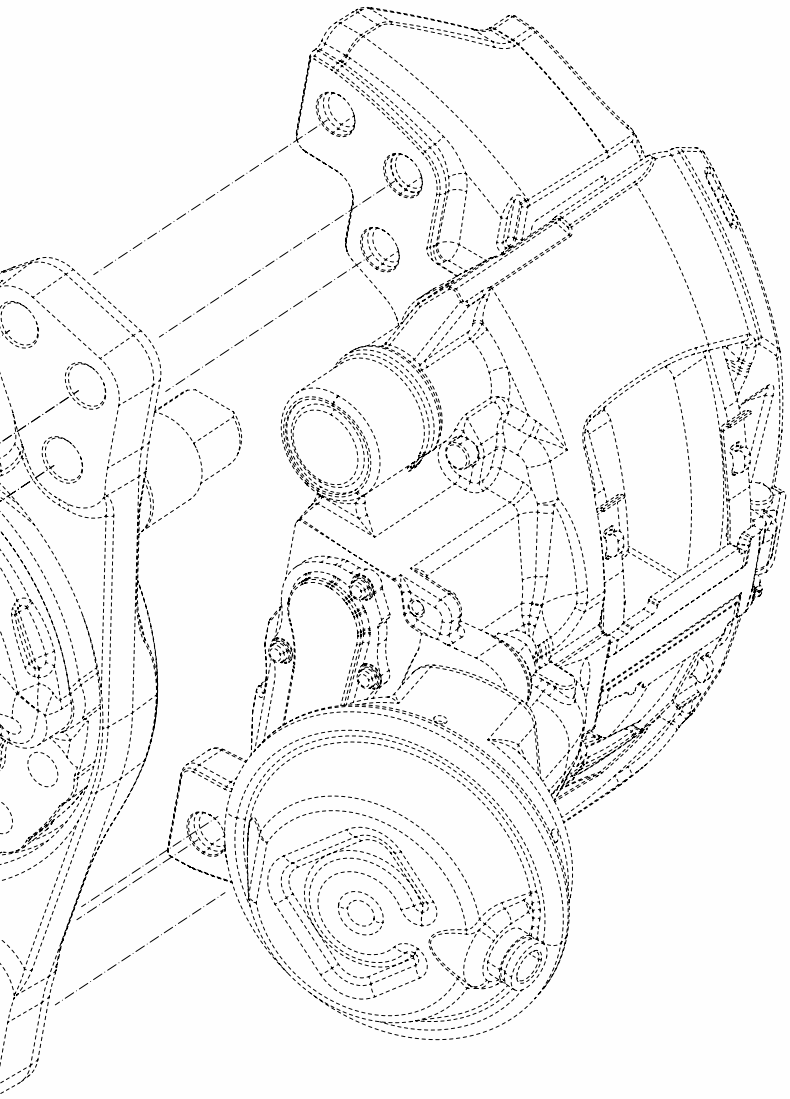

(12x) 6212A1H
4" WASHER HARDENED
Fe/Zn 5C

EC: 80-140 Ft-Lbs.
C: 350-400 Ft-Lbs.
CE PROVIDED.

HENDRICKSON
Auxiliary Axle Systems

PRODUCTION

Copyright © 2020 Hendrickson. All Rights Reserved.

THIS PRINT REMAINS THE PROPERTY OF HENDRICKSON SUSPENSION SYSTEMS. ALL INFORMATION CONTAINED THEREON IS CONFIDENTIAL. IT IS LOANED, SUBJECT TO RETURN ON DEMAND, AND ON EXPRESS CONDITION THAT IT IS NOT TO BE COPIED OR USED DIRECTLY OR INDIRECTLY FOR ANY PURPOSE OTHER THAN THE PURPOSE FOR WHICH IT HAS BEEN LOANED TO YOU.

CAD — CAD FILE UPDATE ON CAD SYSTEM ONLY!

METRIC — UNLESS OTHERWISE NOTED, DIMENSIONS AND TOLERANCES ARE DEFINED IN MILLIMETERS IN ACCORDANCE WITH ASME STANDARD Y14.5M - 1994

DRAWN BY S.KOHLER	DATE 11-12-20	MAKE FROM .	CUSTOMER ALL
CHECKED BY SLONAKER	DATE 12-14-20	FOR MACHINING SEE .	SUSPENSION TYPE .
ENG. APPROVAL A.POWER	DATE 12-14-20	FOR ASSEMBLY SEE .	REF. LAYOUT .
MFG. APPROVAL .	DATE .	REPLACES .	REF. BOM .
Q.C. APPROVAL .	DATE .	EQUIP. .	ORIG. MFG. DWG. .

DESCRIPTION

EXS13 ADB22X/ADB22-LT
CALIPER HARDWARE INSTALL DWG

MODEL WEIGHT	PART/DWG NO.	SHEET NO.
.00 KG	017449-2201	1 OF 1
SCALE 1:1		DWG. SIZE D

THIS DOCUMENT CONTAINS TECHNOLOGY SUBJECT TO THE U.S. EXPORT ADMINISTRATION REGULATIONS (15 CFR PARTS 730-774) OR U.S. INTERNATIONAL TRAFFIC IN ARMS REGULATIONS (22 CFR PARTS 121-130). PRIOR U.S. GOVERNMENT AUTHORIZATION IS REQUIRED TO RELEASE OR TRANSFER THIS TECHNOLOGY TO A FOREIGN PERSON EITHER IN THE UNITED STATES OR IN A FOREIGN COUNTRY.

ITEM	PART NUMBER	DESCRIPTION	QTY
1	017449-2400	BRAKE HARDWARE KIT 15X4 CAST INTEGRATED, WW301 LINING, BRIDGE AXLE	1

NOTES:
1. KIT CONTAINS PARTS FOR BOTH LEFT AND RIGHT HAND ASSEMBLIES (LEFT HAND ASSEMBLY SHOWN).

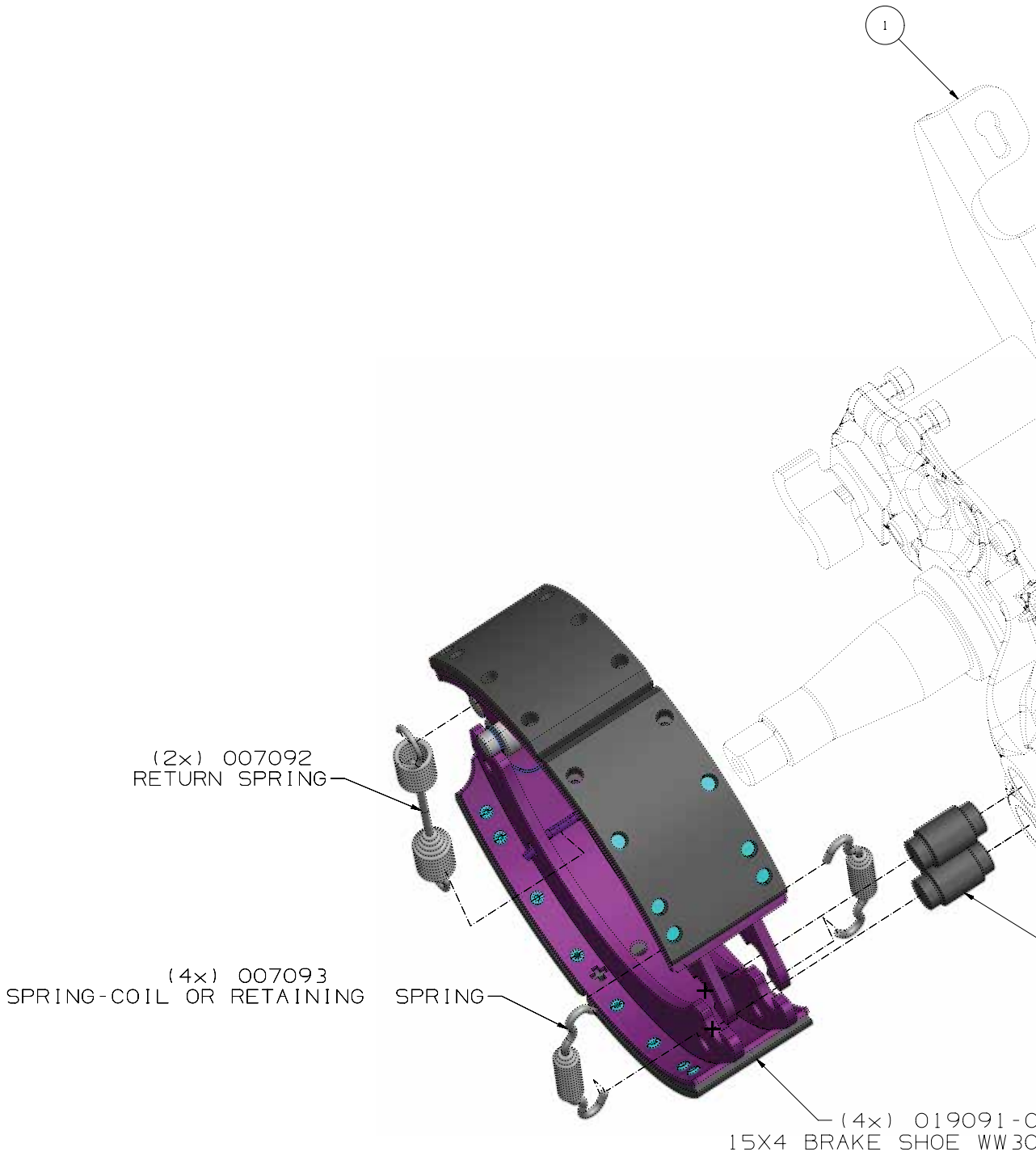

REV	ZONE	DESCRIPTION	BY / DATE	CHK / DATE	ENG / DATE	CN
A		RELEASED FOR PRODUCTION	JLT 01-19-20	JHS 01-19-20	JLT 01-19-20	21-0035

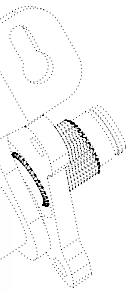

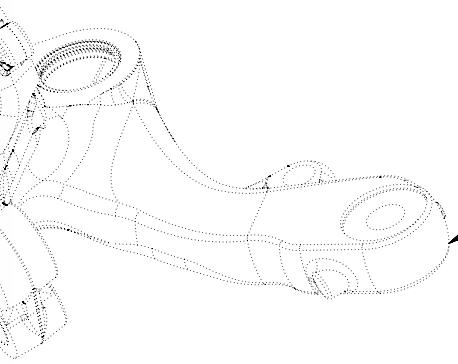

EXS13 CAST INTEGRATED KNUCKLE
REF. ONLY, NOT PART OF KIT

(4x) 009307
PIN -ANCHOR

00
01 LINING

HENDRICKSON
Auxiliary Axle Systems

PRODUCTION

Copyright © 2021 Hendrickson. All Rights Reserved.

THIS PRINT REMAINS THE PROPERTY OF HENDRICKSON SUSPENSION SYSTEMS. ALL INFORMATION CONTAINED THEREON IS CONFIDENTIAL. IT IS LOANED, SUBJECT TO RETURN ON DEMAND, AND ON EXPRESS CONDITION THAT IT IS NOT TO BE COPIED OR USED DIRECTLY OR INDIRECTLY FOR ANY PURPOSE OTHER THAN THE PURPOSE FOR WHICH IT HAS BEEN LOANED TO YOU.

CAD — CAD FILE UPDATE ON CAD SYSTEM ONLY!

METRIC — UNLESS OTHERWISE NOTED, DIMENSIONS AND TOLERANCES ARE DEFINED IN MILLIMETERS IN ACCORDANCE WITH ASME STANDARD Y14.5M - 1994

DRAWN BY: J. TOLLETT	DATE: 01-19-20	MAKE FROM: .	CUSTOMER: ALL
CHECKED BY: SLONAKER	DATE: 01-19-20	FOR MACHINING SEE: .	SUSPENSION TYPE: .
ENG. APPROVAL: J. TOLLETT	DATE: 01-19-20	FOR ASSEMBLY SEE: .	REF. LAYOUT: .
MFG. APPROVAL: .	DATE: .	REPLACES: .	REF. BOM: .
Q.C. APPROVAL: .	DATE: .	EQUIP.: .	ORIG. MFG. DWG.: .

DESCRIPTION: BRAKE HARDWARE KIT CAST INTEGRATED KNUCKLE INSTALL DWG

MODEL WEIGHT	PART/DWG NO.	SHEET NO.
81.7 LBS.	017449-2401	1 OF 1
SCALE 1:1		DWG. SIZE D

THIS DOCUMENT CONTAINS TECHNOLOGY SUBJECT TO THE U.S. EXPORT ADMINISTRATION REGULATIONS (15 CFR PARTS 730-774) OR U.S. INTERNATIONAL TRAFFIC IN ARMS REGULATIONS (22 CFR PARTS 121-130). PRIOR U.S. GOVERNMENT AUTHORIZATION IS REQUIRED TO RELEASE OR TRANSFER THIS TECHNOLOGY TO A FOREIGN PERSON EITHER IN THE UNITED STATES OR IN A FOREIGN COUNTRY.

ITEM	PART NUMBER	DESCRIPTION	QTY
1	018186-0300	FAB INTEGRATED N-SPINDLE KNUCKLE HARDWARE KIT	1

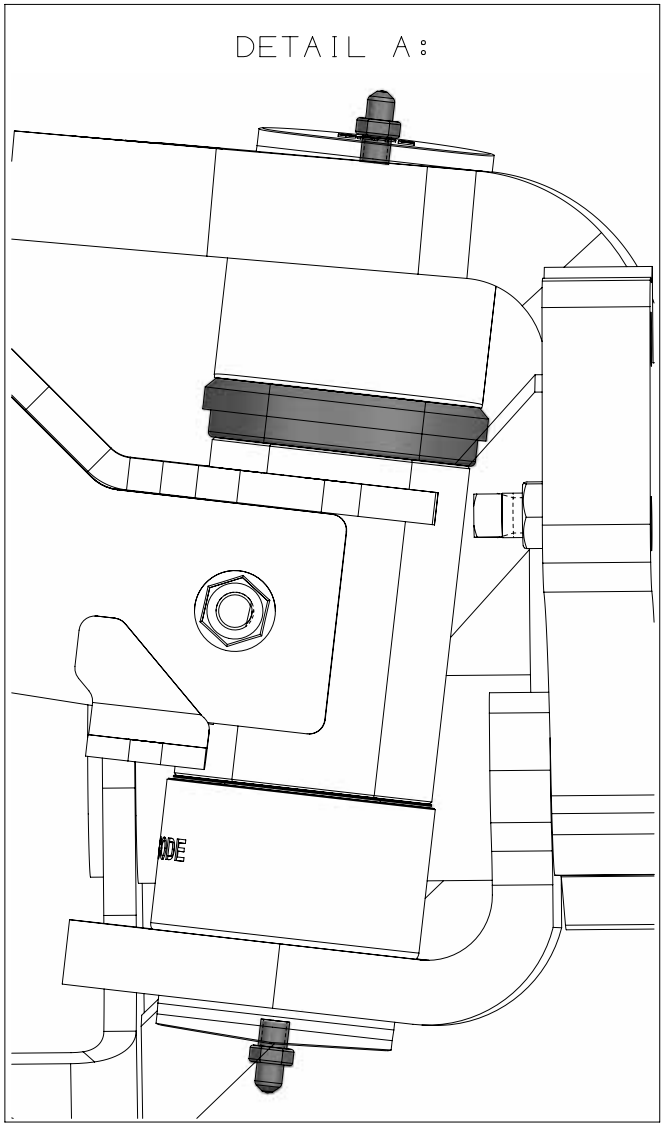

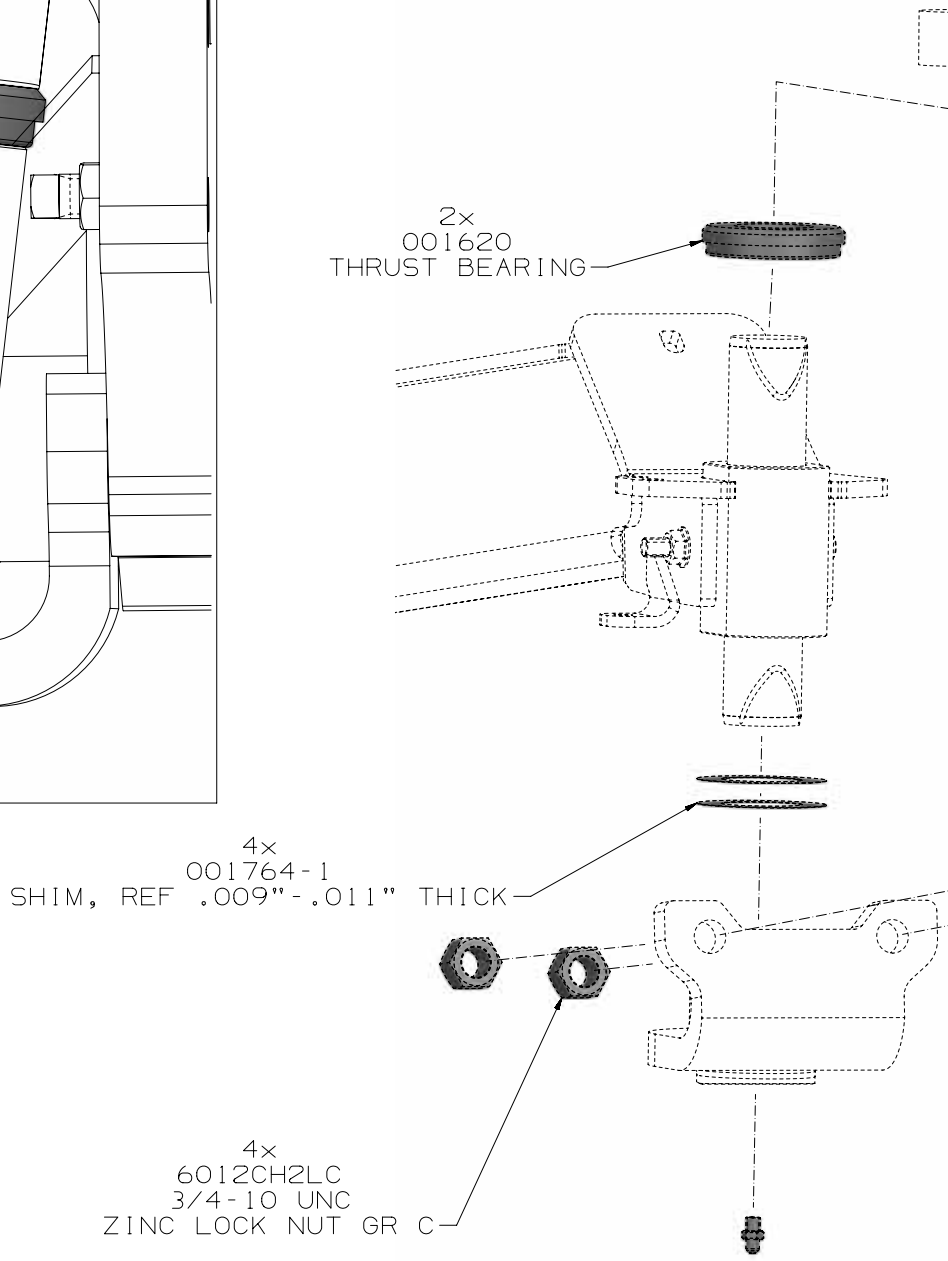

REV	ZONE	DESCRIPTION	BY / DATE	CHK / DATE	ENG / DATE	CN
A		RELEASED FOR PRODUCTION	SAK 01-13-21	JHS 01-19-21	AP 01-19-21	20-0983

EC: 260-290 Ft Lbs.

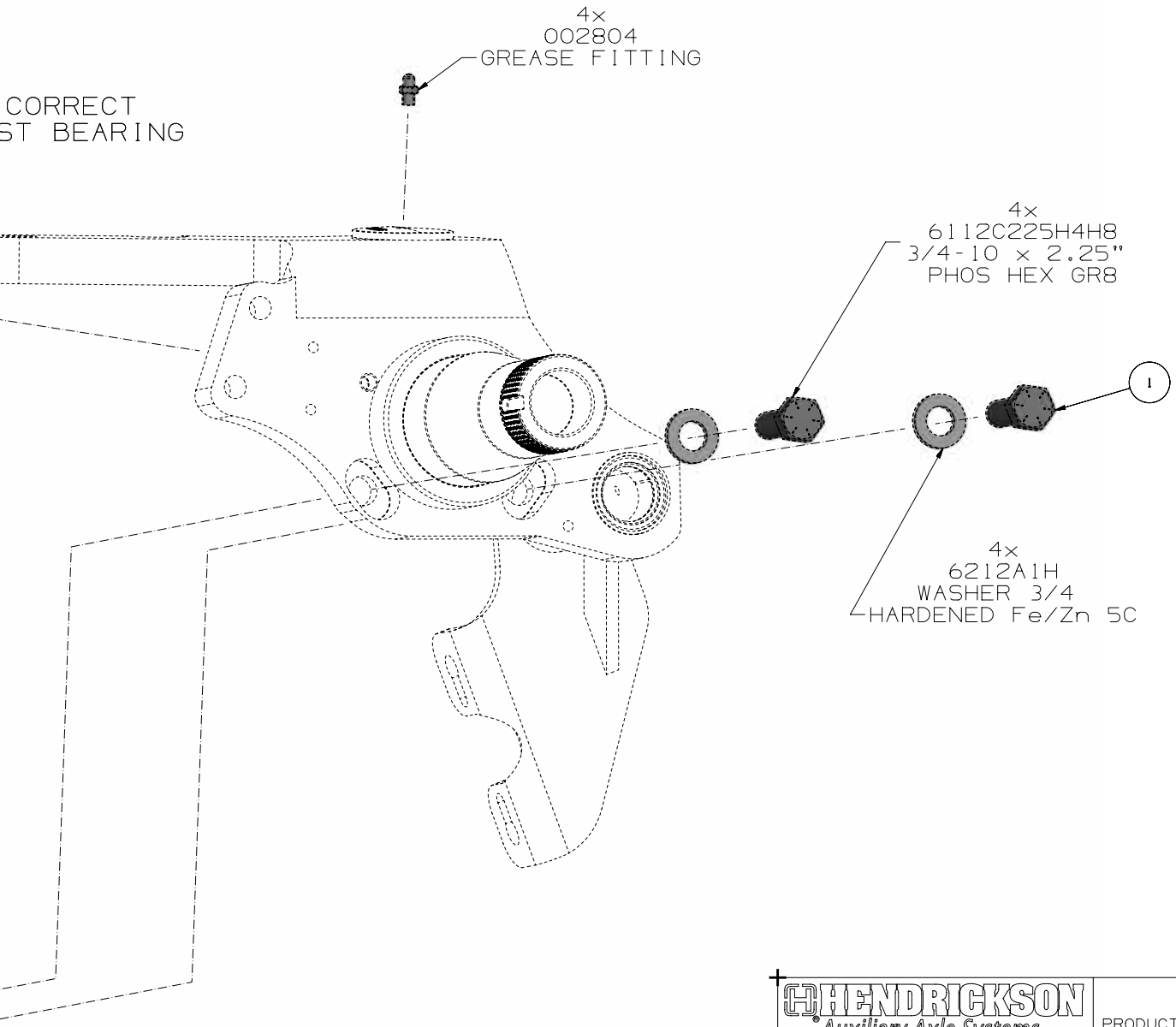

NOTE:
1. KIT CONTAINS PARTS FOR BOTH LEFT AND RIGHT HAND SIDES (LEFT HAND SIDE SHOWN).

HENDRICKSON Auxiliary Axle Systems — PRODUCTION

Copyright © 2021 Hendrickson. All Rights Reserved.

THIS PRINT REMAINS THE PROPERTY OF HENDRICKSON SUSPENSION SYSTEMS. ALL INFORMATION CONTAINED THEREON IS CONFIDENTIAL. IT IS LOANED, SUBJECT TO RETURN ON DEMAND, AND ON EXPRESS CONDITION THAT IT IS NOT TO BE COPIED OR USED DIRECTLY OR INDIRECTLY FOR ANY PURPOSE OTHER THAN THE PURPOSE FOR WHICH IT HAS BEEN LOANED TO YOU.

CAD — CAD FILE UPDATE ON CAD SYSTEM ONLY!

METRIC — UNLESS OTHERWISE NOTED, DIMENSIONS AND TOLERANCES ARE DEFINED IN MILLIMETERS IN ACCORDANCE WITH ASME STANDARD Y14.5M - 1994

DRAWN BY: S.KOHLER	DATE: 01-13-21	MAKE FROM: .	CUSTOMER: ALL
CHECKED BY: SLONAKER	DATE: 01-19-21	FOR MACHINING SEE: .	SUSPENSION TYPE: .
ENG. APPROVAL: A.POWER	DATE: 01-19-21	FOR ASSEMBLY SEE: .	REF. LAYOUT: .
MFG. APPROVAL: .	DATE: .	REPLACES: .	REF. BOM: .
Q.C. APPROVAL: .	DATE: .	EQUIP.: .	ORIG. MFG. DWG.: .

DESCRIPTION: FAB INTEGRATED N-SPINDLE KNUCKLE HARDWARE INSTALLATION DWG

MODEL WEIGHT	PART/DWG NO.	SHEET NO.
2.09 LBS	018186-0301	1 OF 1
SCALE 1:1		DWG. SIZE D

THIS DOCUMENT CONTAINS TECHNOLOGY SUBJECT TO THE U.S. EXPORT ADMINISTRATION REGULATIONS (15 CFR PARTS 730-774) OR U.S. INTERNATIONAL TRAFFIC IN ARMS REGULATIONS (22 CFR PARTS 121-130). PRIOR U.S. GOVERNMENT AUTHORIZATION IS REQUIRED TO RELEASE OR TRANSFER THIS TECHNOLOGY TO A FOREIGN PERSON EITHER IN THE UNITED STATES OR IN A FOREIGN COUNTRY.

ITEM	PART NUMBER	DESCRIPTION	QTY
1	018186-0100	CAST INTEGRATED KNUCKLE HARDWARE KIT	1

5/8-11 TORQUE SPE

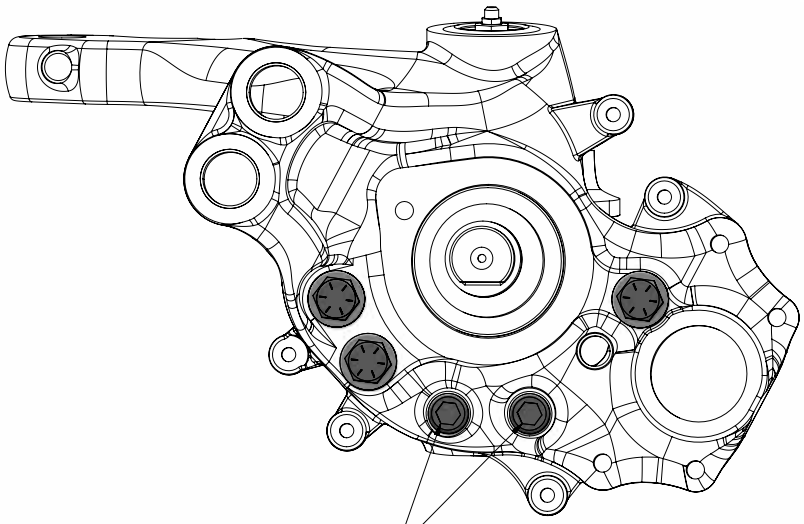

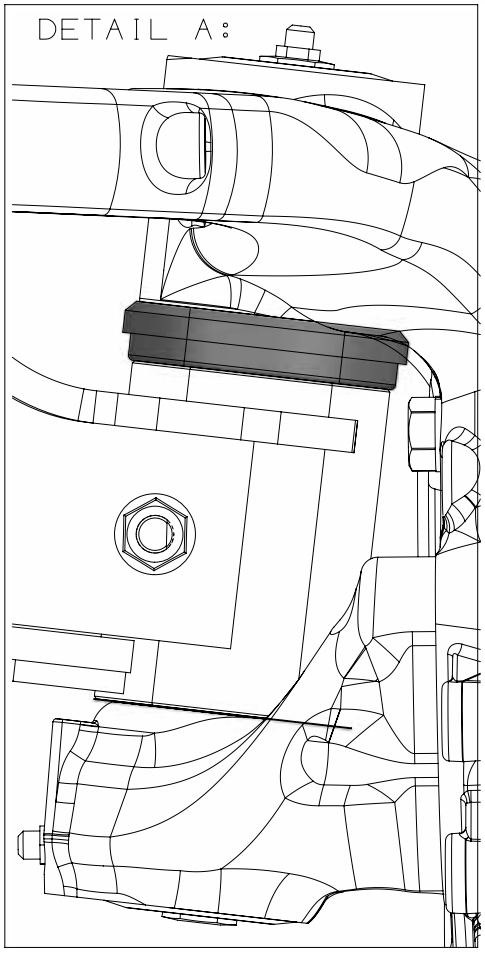

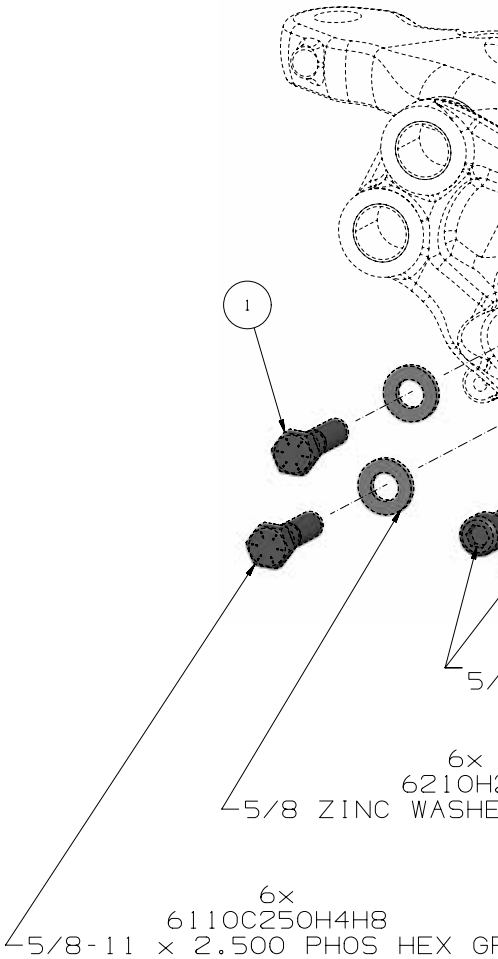

NOTE:
1. KIT CONTAINS PARTS FOR BOTH LEFT AND RIGHT HAND SIDES (LEFT HAND SIDE SHOWN).

REV	ZONE	DESCRIPTION	BY / DATE	CHK / DATE	ENG / DATE	CN
A		RELEASED FOR PRODUCTION	SAK 01-13-21	JHS 01-19-21	AP 01-19-21	20-0983
B		001764-1 WAS QTY. (4)	SAK 11-04-22	JHS 11-04-22	AP 11-04-22	22-0416

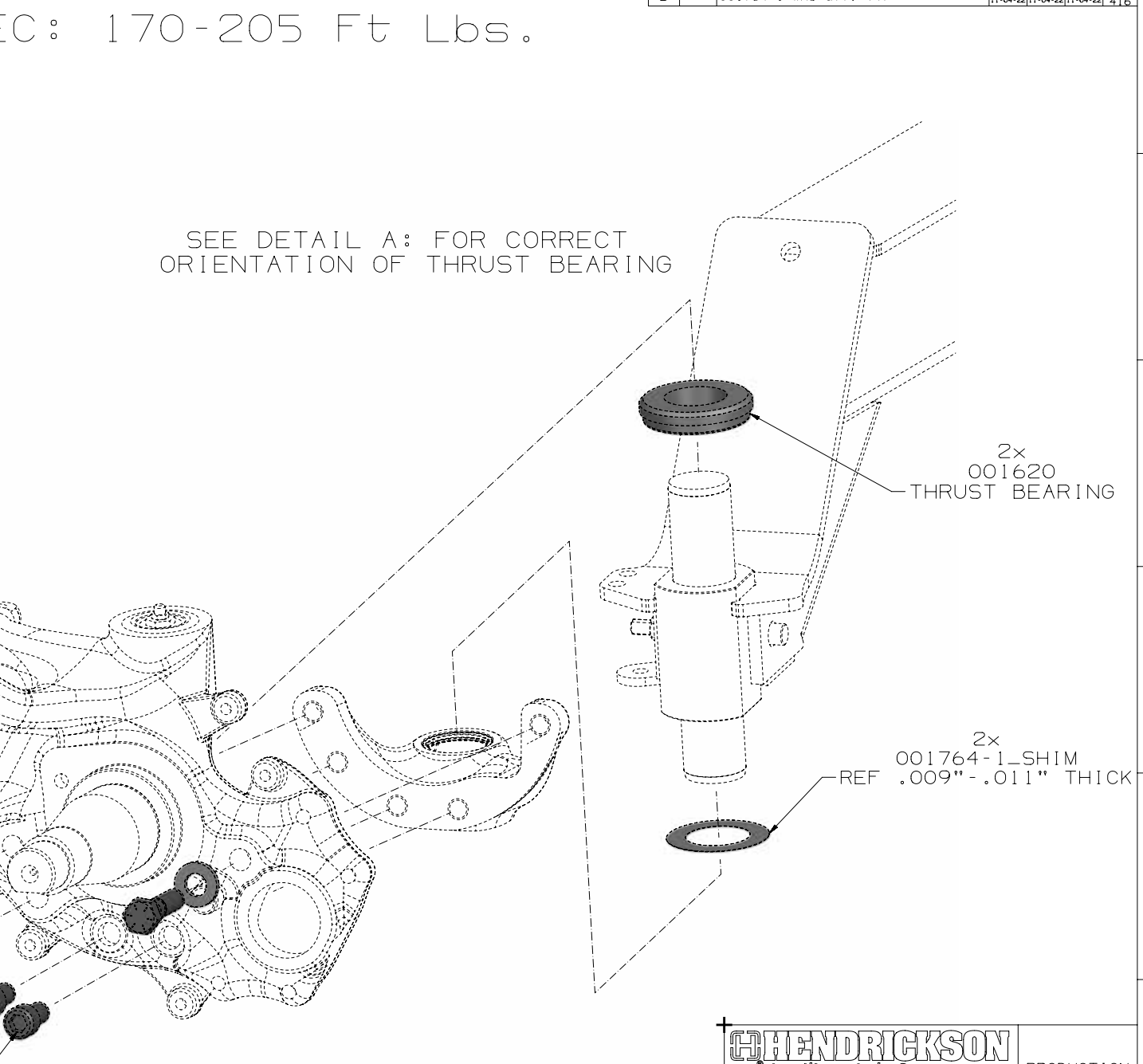

HENDRICKSON Auxiliary Axle Systems

PRODUCTION

Copyright © 2022 Hendrickson, All Rights Reserved.

THIS PRINT REMAINS THE PROPERTY OF HENDRICKSON SUSPENSION SYSTEMS. ALL INFORMATION CONTAINED THEREON IS CONFIDENTIAL. IT IS LOANED, SUBJECT TO RETURN ON DEMAND, AND ON EXPRESS CONDITION THAT IT IS NOT TO BE COPIED OR USED DIRECTLY OR INDIRECTLY FOR ANY PURPOSE OTHER THAN THE PURPOSE FOR WHICH IT HAS BEEN LOANED TO YOU.

CAD — CAD FILE UPDATE ON CAD SYSTEM ONLY!

METRIC — UNLESS OTHERWISE NOTED, DIMENSIONS AND TOLERANCES ARE DEFINED IN MILLIMETERS IN ACCORDANCE WITH ASME STANDARD Y14.5M - 1994

DRAWN BY S.KOHLER	DATE 01-13-21	MAKE FROM .	CUSTOMER ALL
CHECKED BY SLONAKER	DATE 01-19-21	FOR MACHINING SEE .	SUSPENSION / PROGRAM .
ENG. APPROVAL A.POWER	DATE 01-19-21	FOR ASSEMBLY SEE .	REF. LAYOUT .
MFG. APPROVAL .	DATE .	REPLACES .	REF. BOM .
Q.C. APPROVAL .	DATE .	EQUIP. .	ORIG. MFG. DWG. .

DESCRIPTION: CAST INTEGRATED KNUCKLE HARDWARE INSTALLATION DWG

MODEL WEIGHT	PART/DWG NO.	SHEET NO.
.00 KG	018186-0101	1 OF 1
SCALE 1:1		DWG. SIZE D

THIS DOCUMENT CONTAINS TECHNOLOGY SUBJECT TO THE U.S. EXPORT ADMINISTRATION REGULATIONS (15 CFR PARTS 730-774) OR U.S. INTERNATIONAL TRAFFIC IN ARMS REGULATIONS (22 CFR PARTS 121-130). PRIOR U.S. GOVERNMENT AUTHORIZATION IS REQUIRED TO RELEASE OR TRANSFER THIS TECHNOLOGY TO A FOREIGN PERSON EITHER IN THE UNITED STATES OR IN A FOREIGN COUNTY.

ITEM	PART NUMBER	DESCRIPTION	QTY
1	018186-0200	CAST BOLT-ON KNUCKLE HARDWARE KIT	1

5/8-11 TORQUE

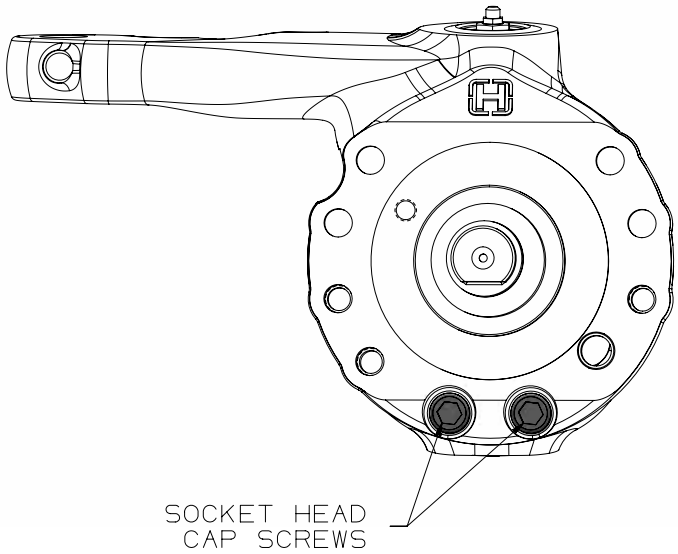

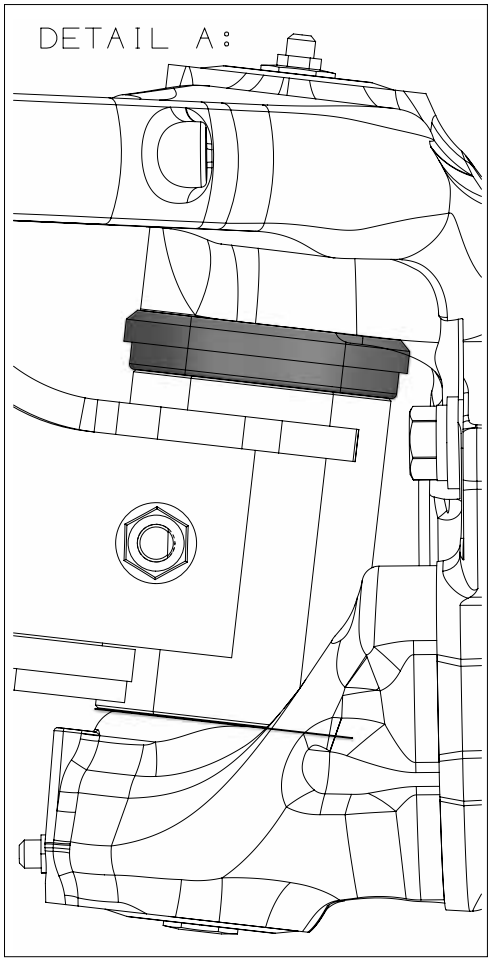

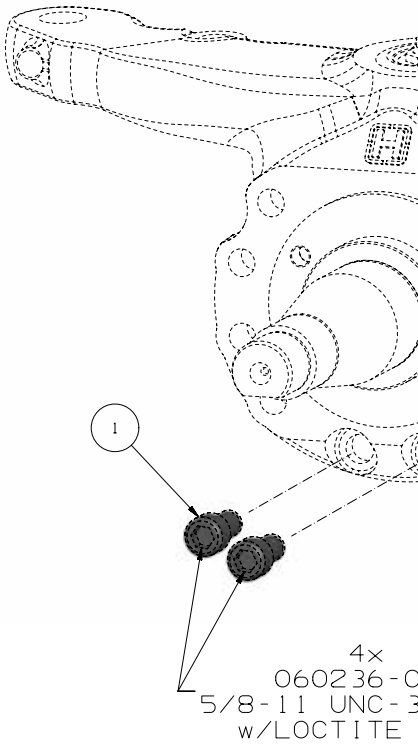

NOTE:
1. KIT CON
(LEFT H

REV	ZONE	DESCRIPTION	BY / DATE	CHK / DATE	ENG / DATE	CN
A		RELEASED FOR PRODUCTION	SAK 01-13-21	JHS 01-19-21	AP 01-19-21	20-0983
B		UPDATE CAD REF SETS	JAG 07-06-22	JHS 07-06-22	JAG 07-06-22	22-0058
C		001764-1 WAS QTY (4)	SAK 11-04-22	JHS 11-04-22	AP 11-04-22	22-0416

SPEC: 170-205 Ft Lbs.

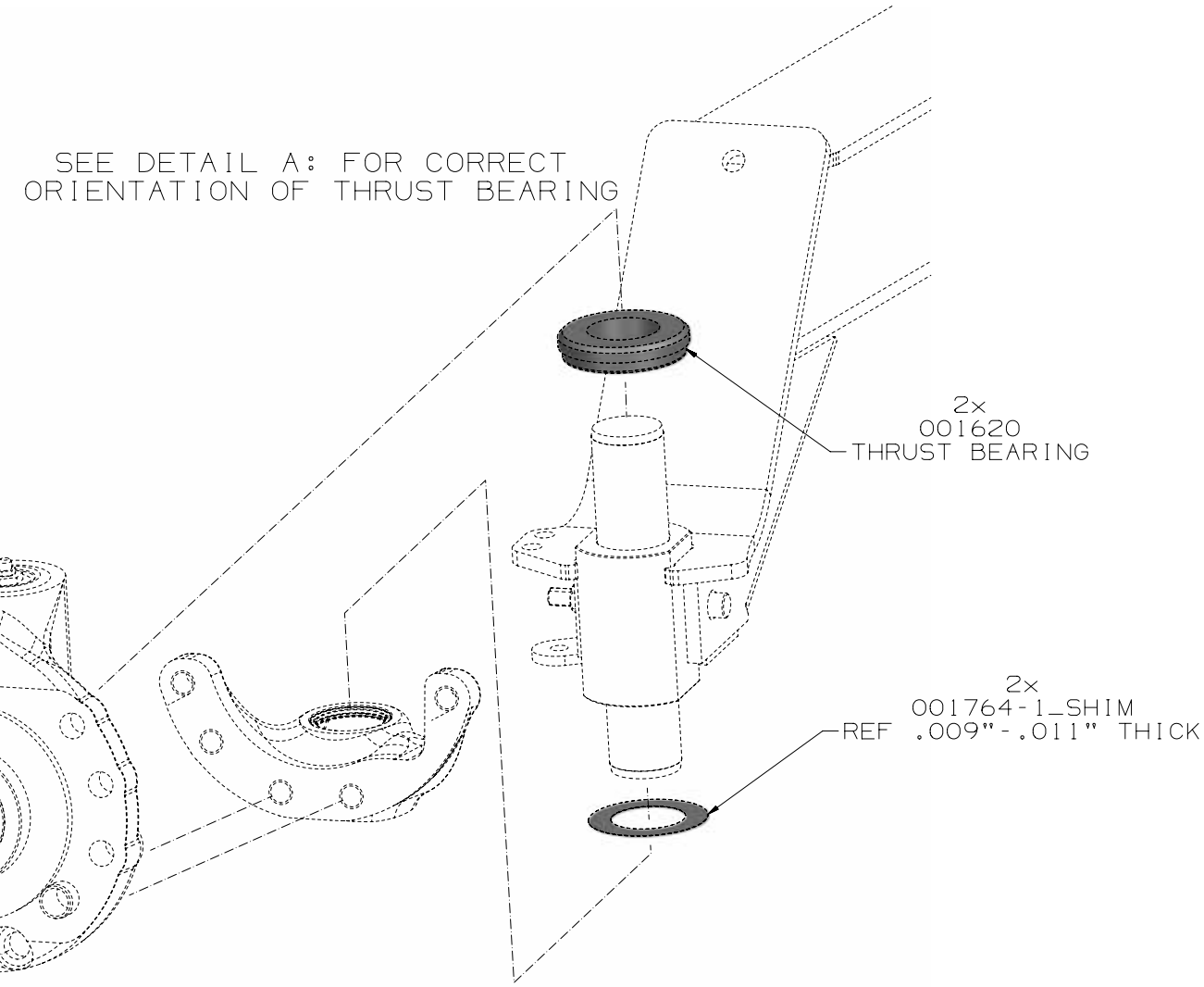

001
3A SHCS
PATCH

TAINS PARTS FOR BOTH LEFT AND RIGHT HAND SIDES
AND SIDE SHOWN).

HENDRICKSON
Auxiliary Axle Systems

PRODUCTION

Copyright © 2022 Hendrickson. All Rights Reserved.

THIS PRINT REMAINS THE PROPERTY OF HENDRICKSON SUSPENSION SYSTEMS. ALL INFORMATION CONTAINED THEREON IS CONFIDENTIAL. IT IS LOANED, SUBJECT TO RETURN ON DEMAND, AND ON EXPRESS CONDITION THAT IT IS NOT TO BE COPIED OR USED DIRECTLY OR INDIRECTLY FOR ANY PURPOSE OTHER THAN THE PURPOSE FOR WHICH IT HAS BEEN LOANED TO YOU.

CAD — CAD FILE UPDATE ON CAD SYSTEM ONLY!

METRIC — UNLESS OTHERWISE NOTED, DIMENSIONS AND TOLERANCES ARE DEFINED IN MILLIMETERS IN ACCORDANCE WITH ASME STANDARD Y14.5M - 1994

DRAWN BY S.KOHLER	DATE 01-13-21	MAKE FROM .	CUSTOMER ALL
CHECKED BY SLONAKER	DATE 01-19-21	FOR MACHINING SEE .	SUSPENSION / PROGRAM .
ENG. APPROVAL A.POWER	DATE 01-19-21	FOR ASSEMBLY SEE .	REF. LAYOUT .
MFG. APPROVAL .	DATE .	REPLACES .	REF. BOM .
Q.C. APPROVAL .	DATE .	EQUIP. .	ORIG. MFG. DWG. .

DESCRIPTION

CAST BOLT-ON KNUCKLE HARDWARE INSTALLATION DWG

MODEL WEIGHT	PART/DWG NO.	SHEET NO.
1.25 Lbs	018186-0201	1 OF 1
SCALE 1:1		DWG. SIZE D

THIS DOCUMENT CONTAINS TECHNOLOGY SUBJECT TO THE U.S. EXPORT ADMINISTRATION REGULATIONS (15 CFR PARTS 730-774) OR U.S. INTERNATIONAL TRAFFIC IN ARMS REGULATIONS (22 CFR PARTS 121-130). PRIOR U.S. GOVERNMENT AUTHORIZATION IS REQUIRED TO RELEASE OR TRANSFER THIS TECHNOLOGY TO A FOREIGN PERSON EITHER IN THE UNITED STATES OR IN A FOREIGN COUNTRY.

NOTE:
1. 9/16-12 TORQUE SPEC: 103.5-126.5 Ft-Lbs.
2. KIT CONTAINS PARTS FOR BOTH LEFT AND RIGHT HAND SIDES.
3. ITEMS 1, 2 AND 3 NOT SHOWN.

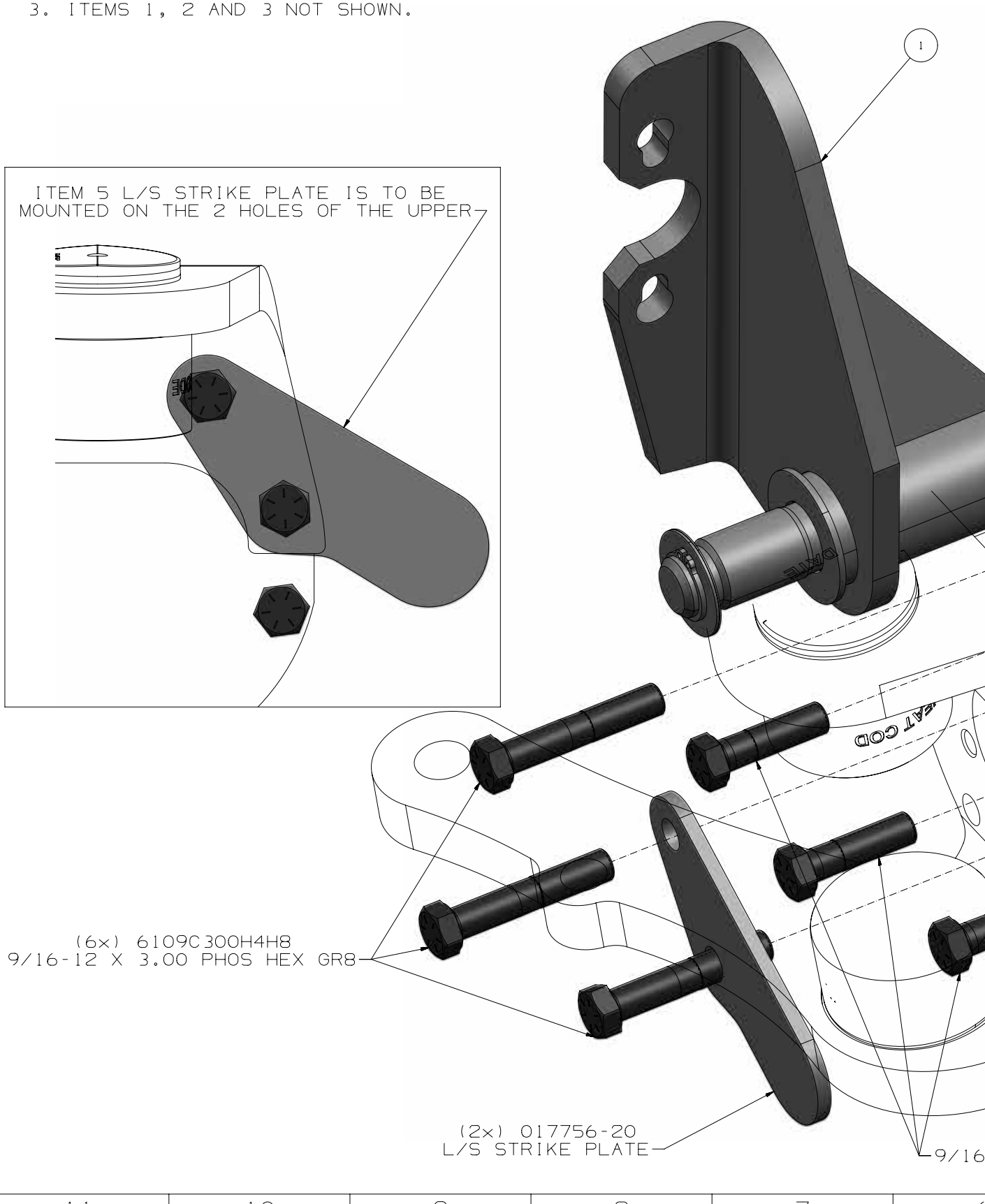

REV	ZONE	DESCRIPTION	BY / DATE	CHK / DATE	ENG / DATE	CN
A		RELEASED FOR PRODUCTION	SAK 06-20-19	A.W 06-20-19	A.W 06-20-19	19-0457
B		SHIM 001764-1 QTY WAS 10	SAK 02-11-20	A.W 02-11-20	A.W 02-11-20	20-0140

ITEM	PART NUMBER	DESCRIPTION	QTY
1	017449-0500	BRAKE HARDWARE KIT FAB 10K BOLT-ON	1

NOTE: BRAKE ASSEMBLY	
PART NUMBER	REMARKS
005896-1	VEHICLE LEFT HAND SIDE SHOWN
005896-2	VEHICLE RIGHT HAND SIDE OPPOSITE

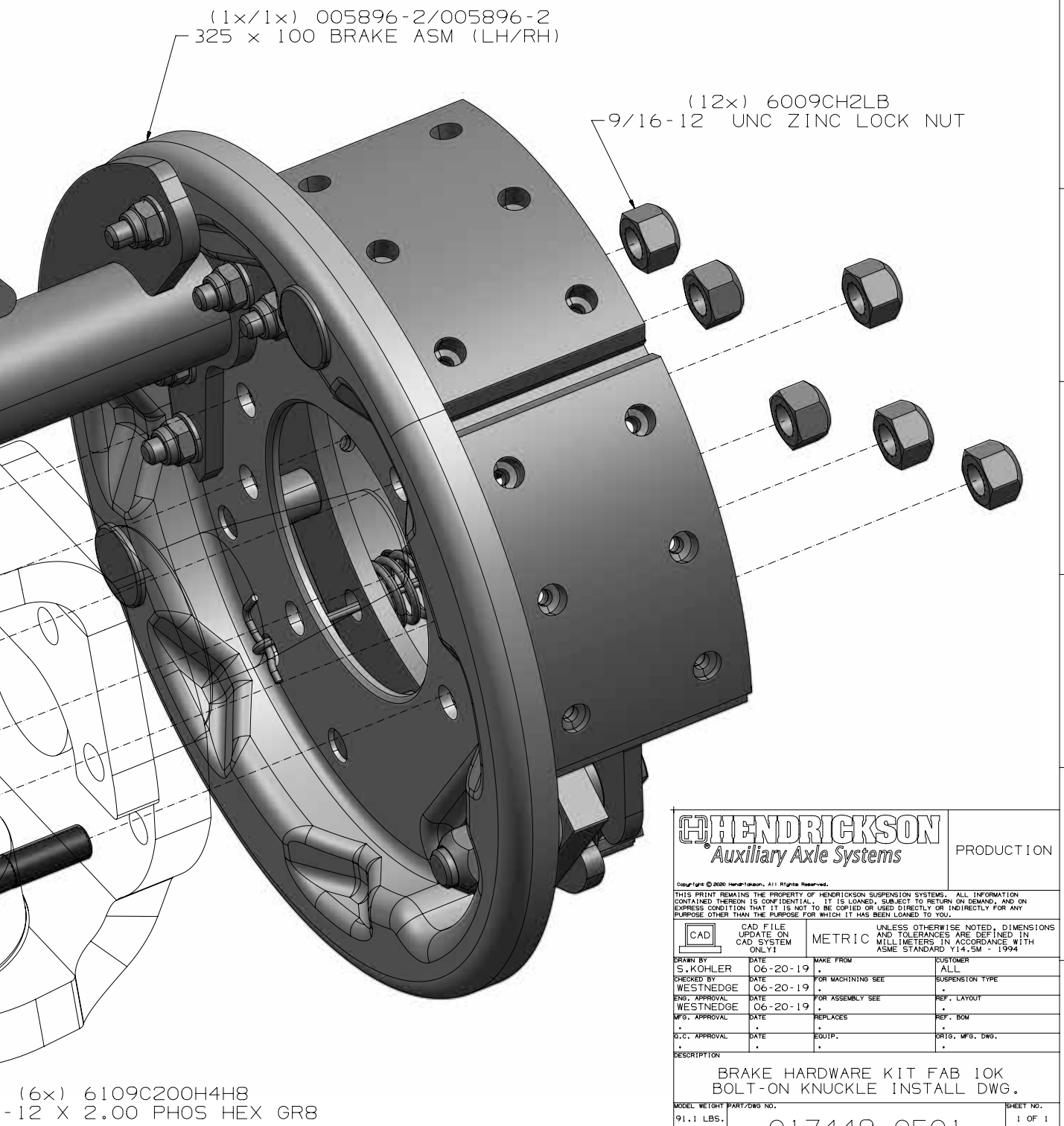

HENDRICKSON Auxiliary Axle Systems

PRODUCTION

Copyright © 2020 Hendrickson. All Rights Reserved.

THIS PRINT REMAINS THE PROPERTY OF HENDRICKSON SUSPENSION SYSTEMS. ALL INFORMATION CONTAINED THEREON IS CONFIDENTIAL. IT IS LOANED, SUBJECT TO RETURN ON DEMAND, AND ON EXPRESS CONDITION THAT IT IS NOT TO BE COPIED OR USED DIRECTLY OR INDIRECTLY FOR ANY PURPOSE OTHER THAN THE PURPOSE FOR WHICH IT HAS BEEN LOANED TO YOU.

CAD — CAD FILE UPDATE ON CAD SYSTEM ONLY!

METRIC — UNLESS OTHERWISE NOTED, DIMENSIONS AND TOLERANCES ARE DEFINED IN MILLIMETERS IN ACCORDANCE WITH ASME STANDARD Y14.5M - 1994

DRAWN BY S.KOHLER	DATE 06-20-19	MAKE FROM .	CUSTOMER ALL
CHECKED BY WESTNEDGE	DATE 06-20-19	FOR MACHINING SEE .	SUSPENSION TYPE .
ENG. APPROVAL WESTNEDGE	DATE 06-20-19	FOR ASSEMBLY SEE .	REF. LAYOUT .
MFG. APPROVAL .	DATE .	REPLACES .	REF. BOM .
Q.C. APPROVAL .	DATE .	EQUIP. .	ORIG. MFG. DWG. .

DESCRIPTION: BRAKE HARDWARE KIT FAB 10K BOLT-ON KNUCKLE INSTALL DWG.

MODEL WEIGHT	PART/DWG NO.	SHEET NO.
91.1 LBS.	017449-0501	1 OF 1
SCALE 1:1		DWG. SIZE D

THIS DOCUMENT CONTAINS TECHNOLOGY SUBJECT TO THE U.S. EXPORT ADMINISTRATION REGULATIONS (15 CFR PARTS 730-774) OR U.S. INTERNATIONAL TRAFFIC IN ARMS REGULATIONS (22 CFR PARTS 121-130). PRIOR U.S. GOVERNMENT AUTHORIZATION IS REQUIRED TO RELEASE OR TRANSFER THIS TECHNOLOGY TO A FOREIGN PERSON EITHER IN THE UNITED STATES OR IN A FOREIGN COUNTRY.

ITEM	PART NUMBER	DESCRIPTION	QTY
1	018986-0100	EXS13 CAST INTEGRATED KNUCKLE DUST SHIELD KIT	1

NOTE:
1. IF UNIT HAS LOCK STRAIGHT YOU WILL HAVE TO REMOVE THE THE LOCK STRAIGHT TARGET AND HARDWARE BEFORE INSTALLING DUSTSHIELD. IF THIS IS THE CASE YOU JUST DISCARD THE USE OF (2) OF THE DUSTSHIELD BOLTS AND REUSE THE L/S TARGET HARDWARE AS SHOWN.
2. L/S TARGET AND HARDWARE ARE NOT PART OF THIS KIT
3. KIT CONTAINS PARTS FOR BOTH LEFT AND RIGHT HAND SIDES (RIGHT HAND SIDE NOT SHOWN).

REV	ZONE	DESCRIPTION	BY / DATE	CHK / DATE	ENG / DATE	CN
A		RELEASED FOR PRODUCTION	SAK 12-06-19	A.W 12-06-19	A.W 12-06-19	19-0901
B		BOLT SWAP_6106F062H4H8	SAK 11-10-20	JHS 11-10-20	AP 11-10-20	20-0816

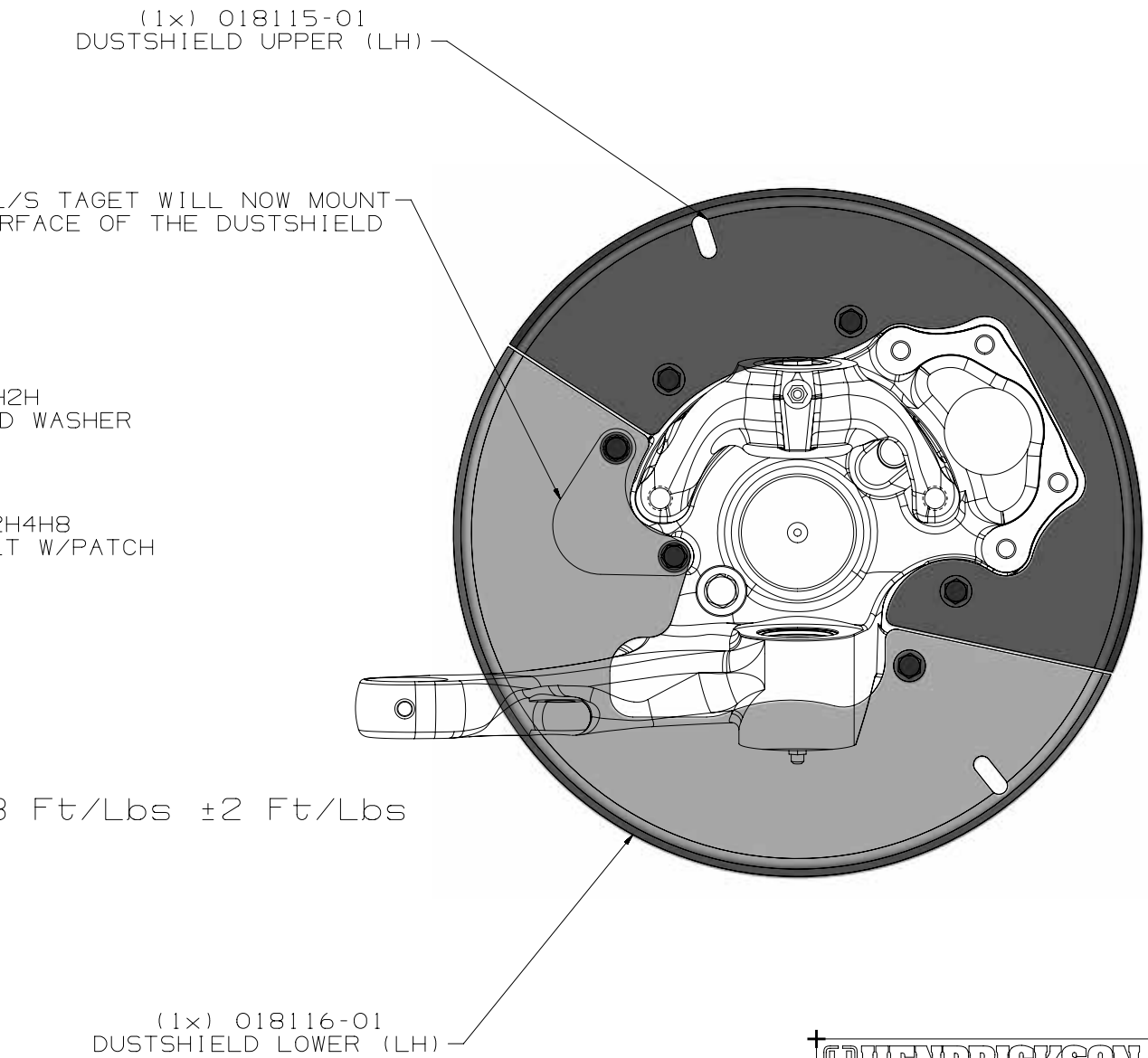

HENDRICKSON
Auxiliary Axle Systems

PRODUCTION

Copyright © 2020 Hendrickson, All Rights Reserved.

THIS PRINT REMAINS THE PROPERTY OF HENDRICKSON SUSPENSION SYSTEMS. ALL INFORMATION CONTAINED THEREON IS CONFIDENTIAL. IT IS LOANED, SUBJECT TO RETURN ON DEMAND, AND ON EXPRESS CONDITION THAT IT IS NOT TO BE COPIED OR USED DIRECTLY OR INDIRECTLY FOR ANY PURPOSE OTHER THAN THE PURPOSE FOR WHICH IT HAS BEEN LOANED TO YOU.

CAD — CAD FILE UPDATE ON CAD SYSTEM ONLY!

METRIC — UNLESS OTHERWISE NOTED, DIMENSIONS AND TOLERANCES ARE DEFINED IN MILLIMETERS IN ACCORDANCE WITH ASME STANDARD Y14.5M - 1994

DRAWN BY: S.KOHLER	DATE: 12-06-19	MAKE FROM: .	CUSTOMER: ALL
CHECKED BY: WESTNEDGE	DATE: 12-06-19	FOR MACHINING SEE: .	SUSPENSION TYPE: .
ENG. APPROVAL: WESTNEDGE	DATE: 12-06-19	FOR ASSEMBLY SEE: .	REF. LAYOUT: .
MFG. APPROVAL: .	DATE: .	REPLACES: .	REF. BOM: .
Q.C. APPROVAL: .	DATE: .	EQUIP.: .	ORIG. MFG. DWG.: .

DESCRIPTION: EXS13 CAST INTEGRATED KNUCKLE DUSTSHIELD KIT INSTALL DWG

MODEL WEIGHT	PART/DWG NO.	SHEET NO.
.40 LBS.	018986-0101	1 OF 1
SCALE 1:1		DWG. SIZE D

THIS DOCUMENT CONTAINS TECHNOLOGY SUBJECT TO THE U.S. EXPORT ADMINISTRATION REGULATIONS (15 CFR PARTS 730-774) OR U.S. INTERNATIONAL TRAFFIC IN ARMS REGULATIONS (22 CFR PARTS 121-130). PRIOR U.S. GOVERNMENT AUTHORIZATION IS REQUIRED TO RELEASE OR TRANSFER THIS TECHNOLOGY TO A FOREIGN PERSON EITHER IN THE UNITED STATES OR IN A FOREIGN COUNTRY.

ITEM	PART NUMBER	DESCRIPTION	QTY
1	018986-0200	EXS13 CAST BOLT-ON KNUCKLE_ADB_DUST SHIELD KIT	1

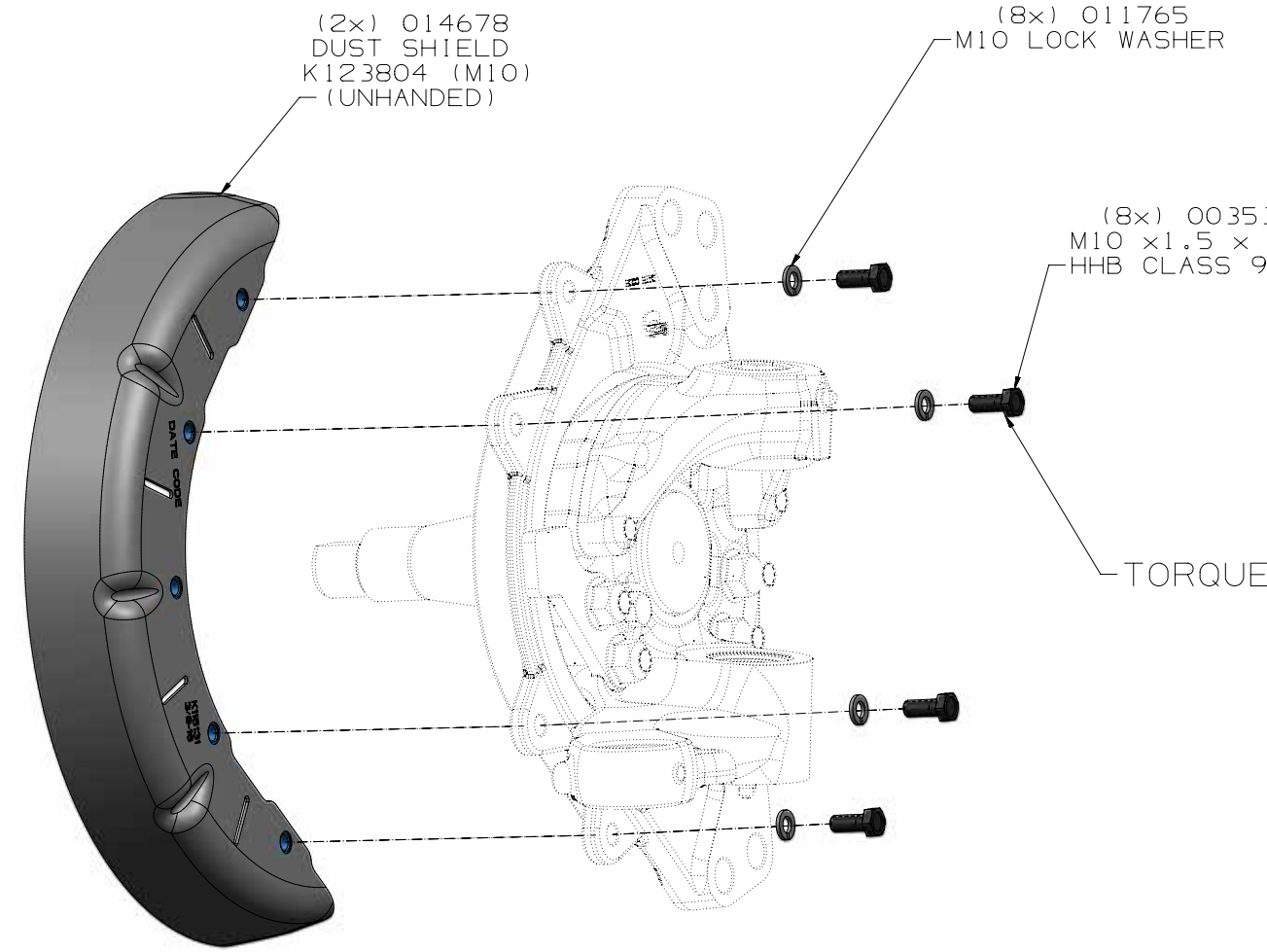

NOTE:
1. KIT CONTAINS PARTS FOR BOTH LEFT AND RIGHT HAND SIDES (LEFT HAND SIDE SHOWN).

REV	ZONE	DESCRIPTION	BY / DATE	CHK / DATE	ENG / DATE	CN
A		RELEASED FOR PRODUCTION	SAK 12-16-19	A.W 12-16-19	A.W 12-16-19	19-0937

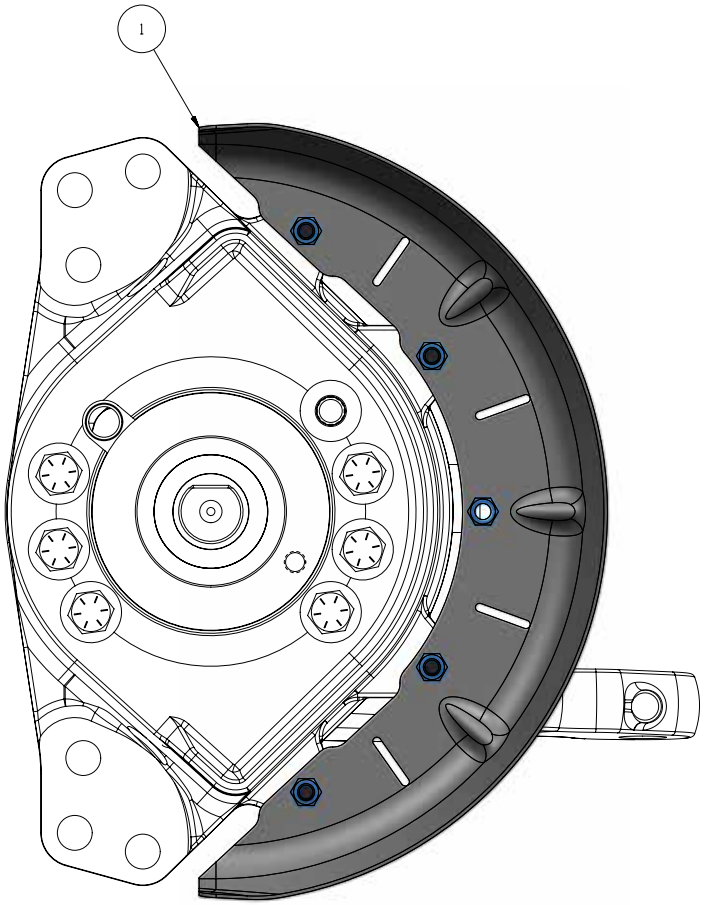

34-4
25mm
BOLT

TO 28 Ft/Lbs ±2 Ft/Lbs

HENDRICKSON
Auxiliary Axle Systems

PRODUCTION

Copyright © 2020 Hendrickson. All Rights Reserved.

THIS PRINT REMAINS THE PROPERTY OF HENDRICKSON SUSPENSION SYSTEMS. ALL INFORMATION CONTAINED THEREON IS CONFIDENTIAL. IT IS LOANED, SUBJECT TO RETURN ON DEMAND, AND ON EXPRESS CONDITION THAT IT IS NOT TO BE COPIED OR USED DIRECTLY OR INDIRECTLY FOR ANY PURPOSE OTHER THAN THE PURPOSE FOR WHICH IT HAS BEEN LOANED TO YOU.

CAD — CAD FILE UPDATE ON CAD SYSTEM ONLY!

METRIC — UNLESS OTHERWISE NOTED, DIMENSIONS AND TOLERANCES ARE DEFINED IN MILLIMETERS IN ACCORDANCE WITH ASME STANDARD Y14.5M - 1994

DRAWN BY: S.KOHLER	DATE: 12-16-19	MAKE FROM: .	CUSTOMER: ALL
CHECKED BY: WESTNEDGE	DATE: 12-16-19	FOR MACHINING SEE: .	SUSPENSION TYPE: .
ENG. APPROVAL: WESTNEDGE	DATE: 12-16-19	FOR ASSEMBLY SEE: .	REF. LAYOUT: .
MFG. APPROVAL: .	DATE: .	REPLACES: .	REF. BOM: .
Q.C. APPROVAL: .	DATE: .	EQUIP.: .	ORIG. MFG. DWG.: .

DESCRIPTION: EXS13 CAST BOLT-ON KNUCKLE (ADB) DUST SHIELD INSTALL DWG.

MODEL WEIGHT	PART/DWG NO.	SHEET NO.
.00 LBS.	018986-0201	1 OF 1
SCALE 1:1		DWG. SIZE D

THIS DOCUMENT CONTAINS TECHNOLOGY SUBJECT TO THE U.S. EXPORT ADMINISTRATION REGULATIONS (15 CFR PARTS 730-774) OR U.S. INTERNATIONAL TRAFFIC IN ARMS REGULATIONS (22 CFR PARTS 121-130). PRIOR U.S. GOVERNMENT AUTHORIZATION IS REQUIRED TO RELEASE OR TRANSFER THIS TECHNOLOGY TO A FOREIGN PERSON EITHER IN THE UNITED STATES OR IN A FOREIGN COUNTRY.

ITEM	PART NU
1	018986-

NOTE:
1. IF AFTERMARKET YOU WILL HAVE TO REMOVE THE LOCK STRAIGHT TARGET AND ANCHOR PIN HARDWARE BEFORE INSTALLING DUSTSHIELD. IF THIS IS THE CASE WE HAVE INCLUDED NEW ANCHOR PIN HARDWARE IN THE R-PART KIT. REBUILD THE UNIT AND REPLACE THE L/S TARGET AS SHOWN.
2. L/S TARGET AND ANCHOR PINS ARE NOT PART OF THIS KIT
3. KIT CONTAINS PARTS FOR BOTH LEFT AND RIGHT HAND SIDES (LEFT HAND SIDE SHOWN).

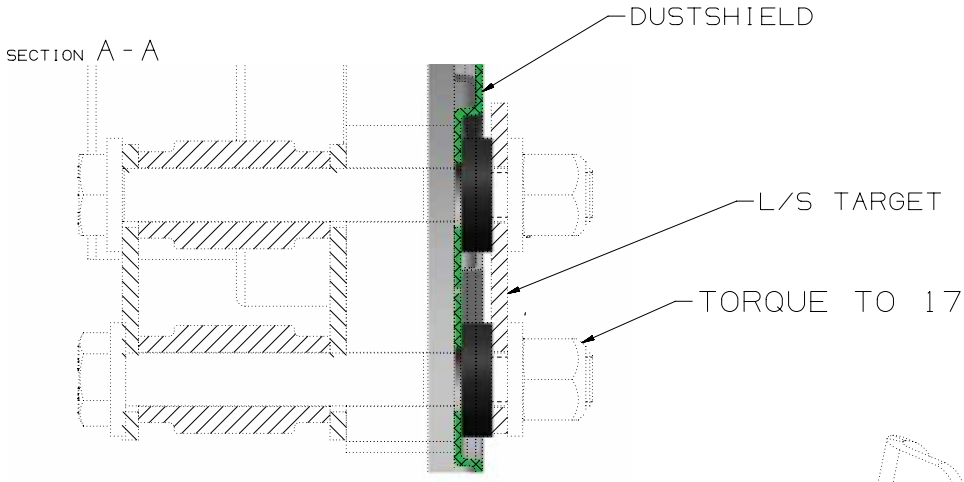

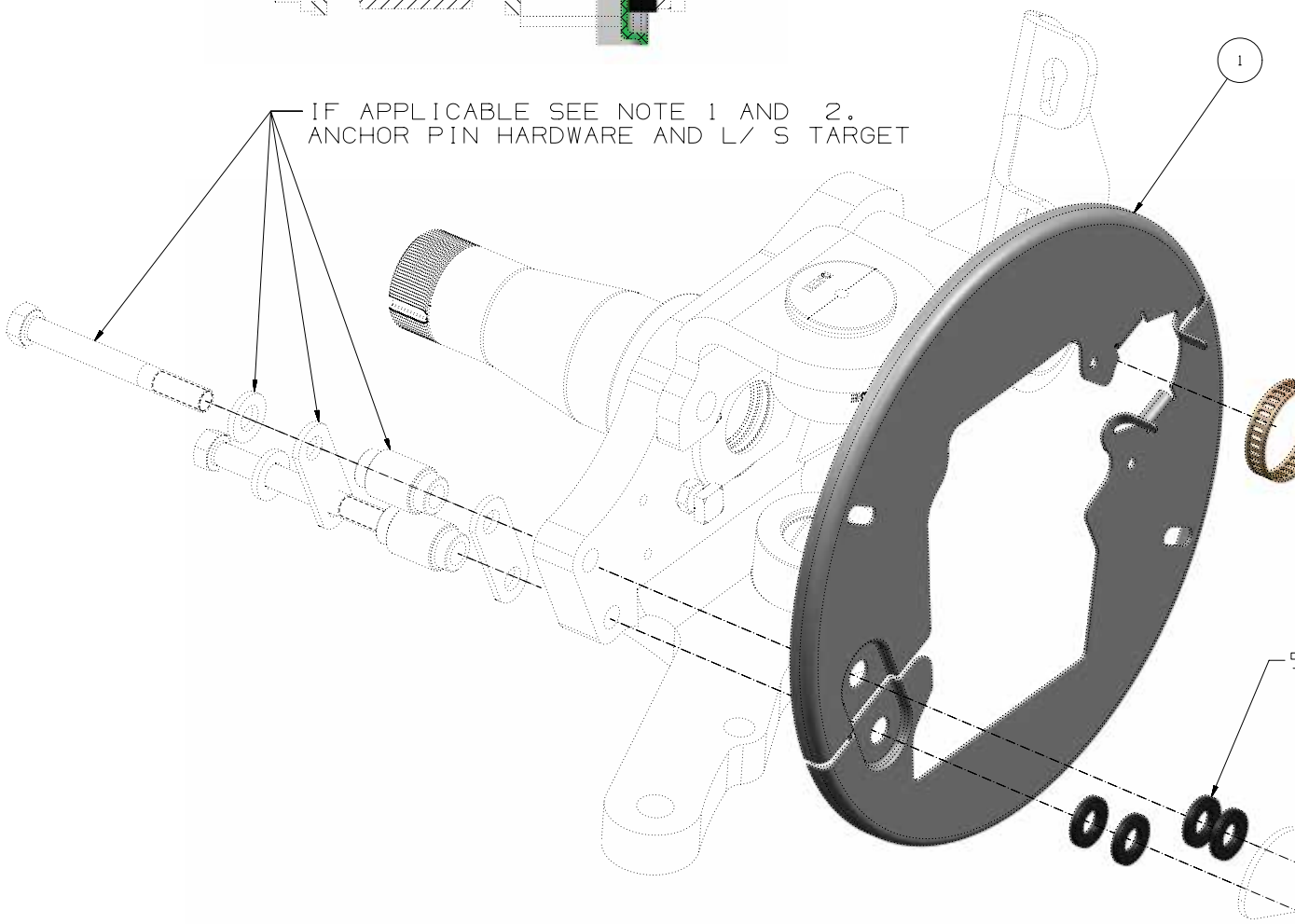

UMBER	DESCRIPTION	QTY
0300	EXS13 FAB N-SPINDLE KNUCKLE, DUST SHIELD KIT	1

REV	ZONE	DESCRIPTION	BY / DATE	CHK / DATE	ENG / DATE	CN
A		RELEASED FOR PRODUCTION	SAK 02-25-20	A.W 02-25-20	A.W 02-25-20	19-0 937

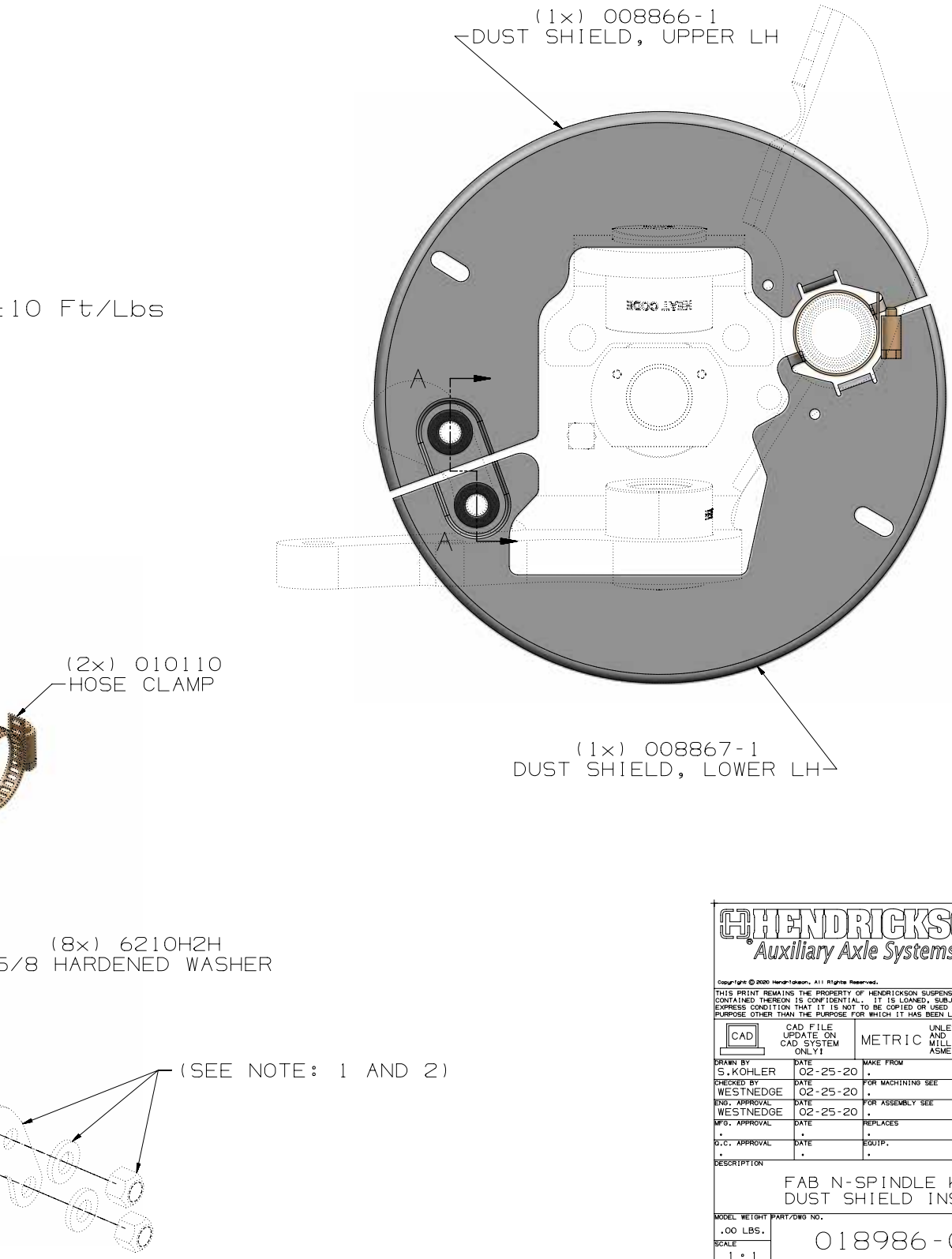

HENDRICKSON Auxiliary Axle Systems

PRODUCTION

Copyright © 2020 Hendrickson. All Rights Reserved.

THIS PRINT REMAINS THE PROPERTY OF HENDRICKSON SUSPENSION SYSTEMS. ALL INFORMATION CONTAINED THEREON IS CONFIDENTIAL. IT IS LOANED, SUBJECT TO RETURN ON DEMAND, AND ON EXPRESS CONDITION THAT IT IS NOT TO BE COPIED OR USED DIRECTLY OR INDIRECTLY FOR ANY PURPOSE OTHER THAN THE PURPOSE FOR WHICH IT HAS BEEN LOANED TO YOU.

CAD — CAD FILE UPDATE ON CAD SYSTEM ONLY!

METRIC — UNLESS OTHERWISE NOTED, DIMENSIONS AND TOLERANCES ARE DEFINED IN MILLIMETERS IN ACCORDANCE WITH ASME STANDARD Y14.5M - 1994

DRAWN BY	DATE	MAKE FROM	CUSTOMER
S.KOHLER	02-25-20	.	ALL
CHECKED BY	DATE	FOR MACHINING SEE	SUSPENSION TYPE
WESTNEDGE	02-25-20	.	.
ENG. APPROVAL	DATE	FOR ASSEMBLY SEE	REF. LAYOUT
WESTNEDGE	02-25-20	.	.
MFG. APPROVAL	DATE	REPLACES	REF. BOM
.	.	.	.
Q.C. APPROVAL	DATE	EQUIP.	ORIG. MFG. DWG.
.	.	.	.

DESCRIPTION

FAB N-SPINDLE KNUICKLE, DUST SHIELD INSTALL DWG

MODEL WEIGHT	PART/DWG NO.	SHEET NO.
.00 LBS.	018986-0301	1 OF 1
SCALE 1:1		DWG. SIZE D

THIS DOCUMENT CONTAINS TECHNOLOGY SUBJECT TO THE U.S. EXPORT ADMINISTRATION REGULATIONS (15 CFR PARTS 730-774) OR U.S. INTERNATIONAL TRAFFIC IN ARMS REGULATIONS (22 CFR PARTS 121-130). PRIOR U.S. GOVERNMENT AUTHORIZATION IS REQUIRED TO RELEASE OR TRANSFER THIS TECHNOLOGY TO A FOREIGN PERSON EITHER IN THE UNITED STATES OR IN A FOREIGN COUNTRY.

APPLICATION SET UP	
AXLE WELDMENT RANGES	FAC
30.5	30.5
~~31.0~~	
~~31.5~~	
32.0	32.0
~~32.5~~	
~~33.0~~	
33.5	33.5
~~34.0~~	
~~34.5~~	
35.0	35.0
~~35.5~~	
~~36.0~~	
36.5	36.5
~~37.0~~	
~~37.5~~	
38.0	38.0
~~38.5~~	
~~39.0~~	
39.5	39.5
~~40.0~~	
~~40.5~~	
41.0	41.0
~~41.5~~	
~~42.0~~	
42.5	42.5
~~43.0~~	
~~43.5~~	
44.0	44.0
~~44.5~~	
~~45.0~~	

PAY CLOSE ATTENTION TO BOLT DIRECTION!

BOLT TORQUE SPEC: HAES 9000-023

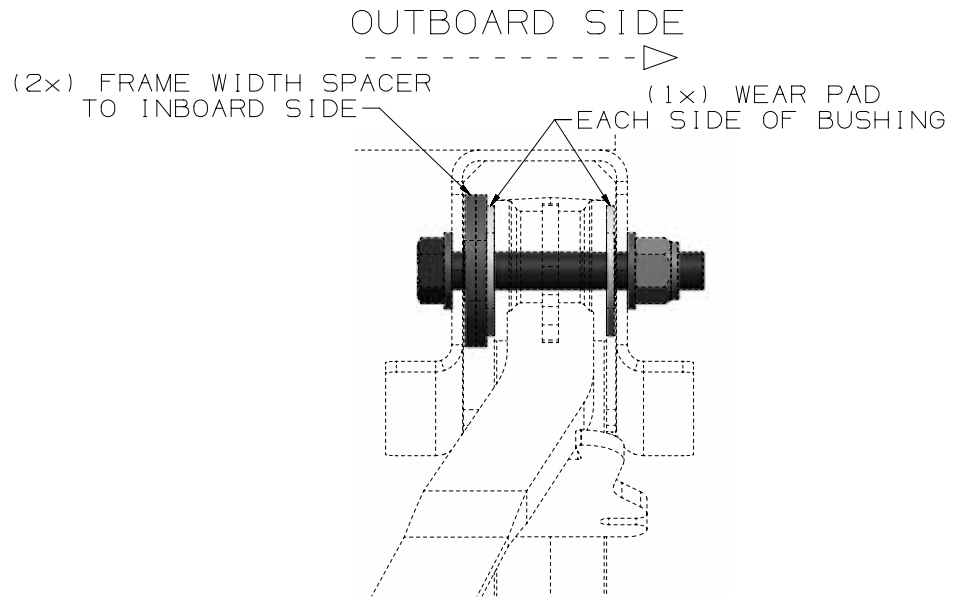

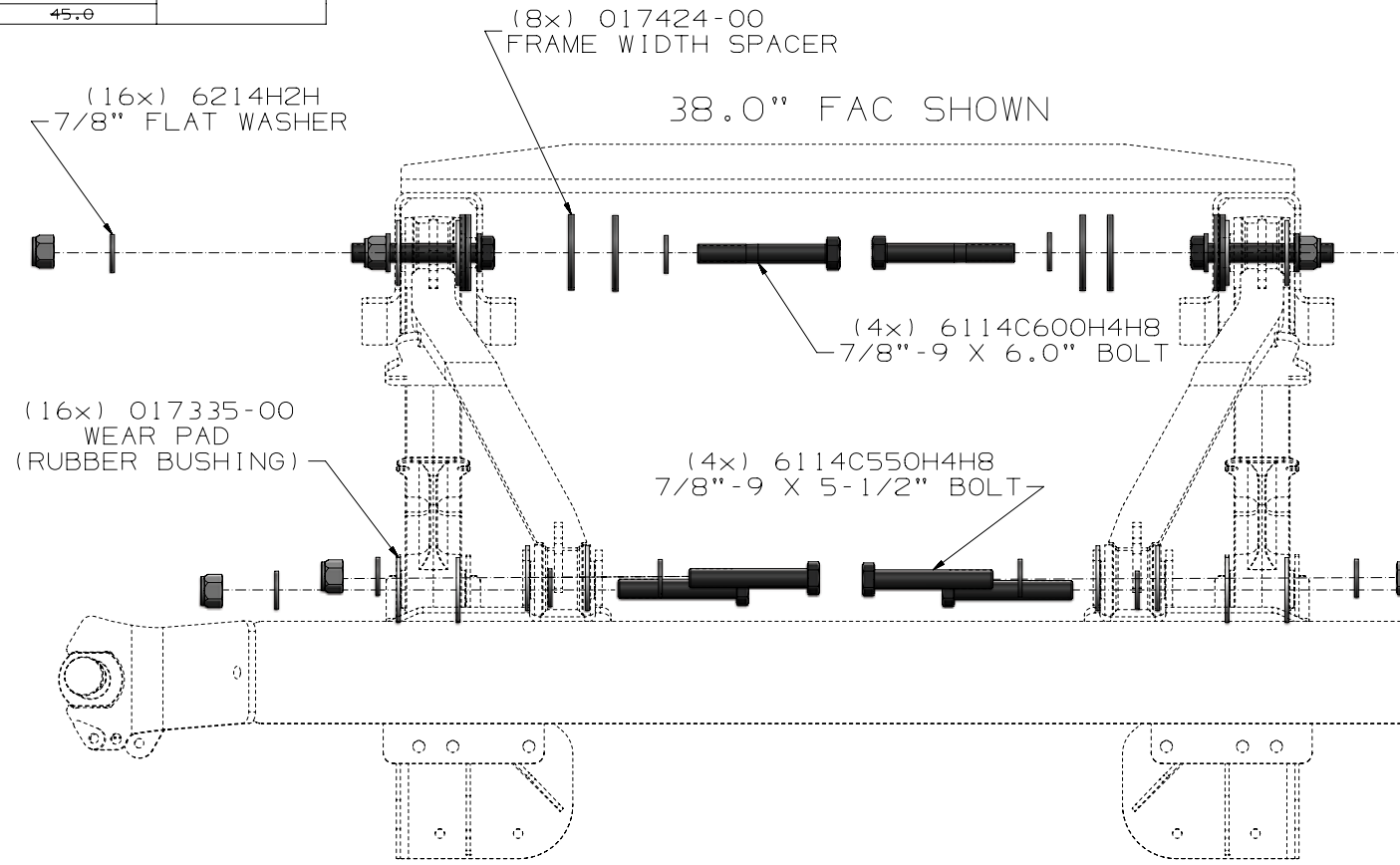

REV	ZONE	DESCRIPTION	BY / DATE	CHK / DATE	ENG / DATE	CN
A		RELEASED FOR PRODUCTION	SAK 12-10-19	A.W 12-10-19	A.W 12-10-19	19-0721

ITEM	PART NUMBER	DESCRIPTION	QTY
1	018122-0100	EXS13 TRAILER PIVOT BOLT HARDWARE KIT	1

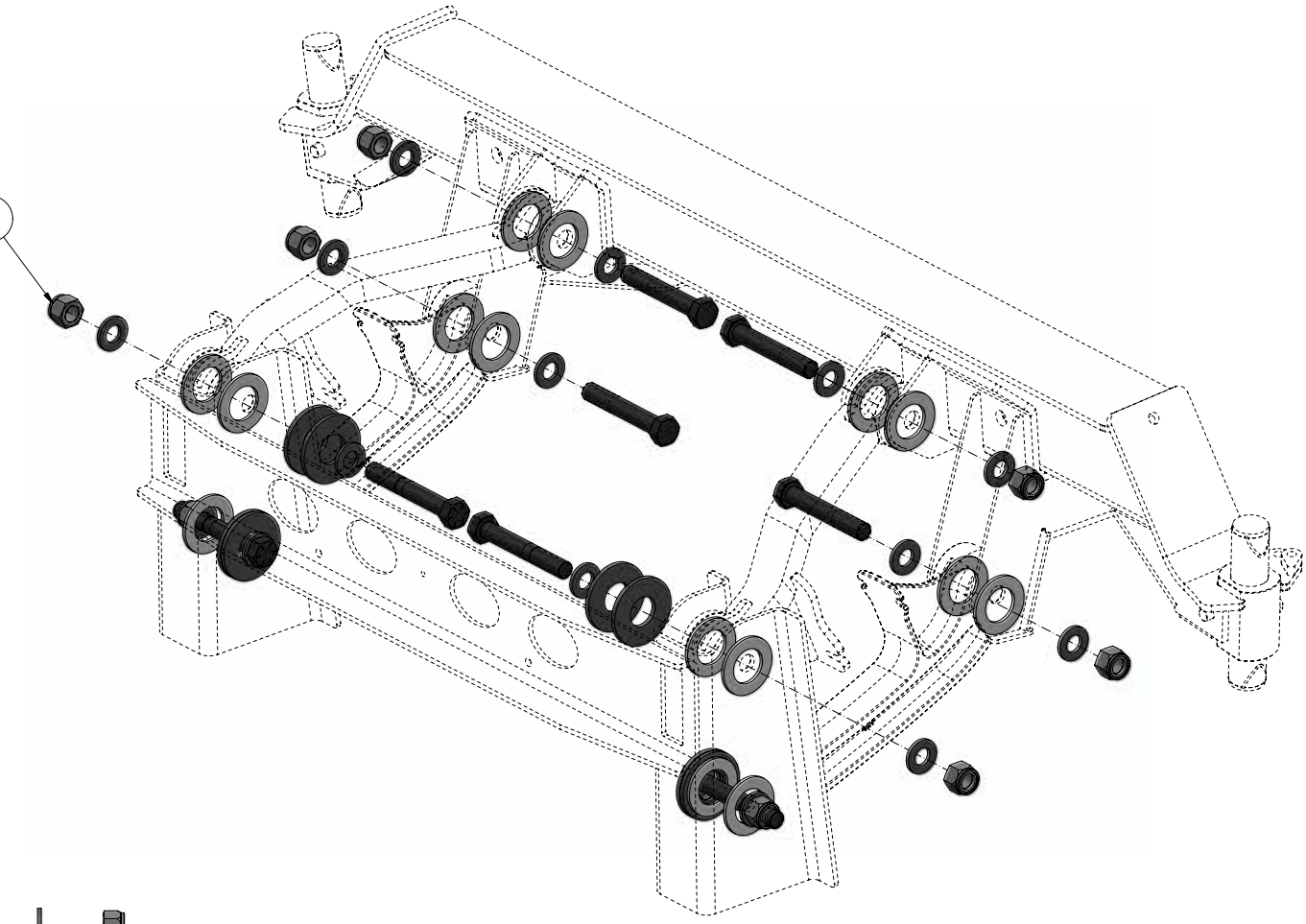

(8x) 6014CH2NC
7/8"-9 NYLON NUT

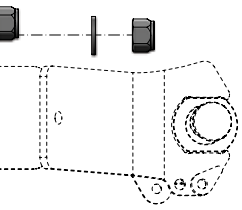

HENDRICKSON
Auxiliary Axle Systems

PRODUCTION

Copyright © 2019 Hendrickson. All Rights Reserved

THIS PRINT REMAINS THE PROPERTY OF HENDRICKSON SUSPENSION SYSTEMS. ALL INFORMATION CONTAINED THEREON IS CONFIDENTIAL. IT IS LOANED, SUBJECT TO RETURN ON DEMAND, AND ON EXPRESS CONDITION THAT IT IS NOT TO BE COPIED OR USED DIRECTLY OR INDIRECTLY FOR ANY PURPOSE OTHER THAN THE PURPOSE FOR WHICH IT HAS BEEN LOANED TO YOU.

CAD — CAD FILE UPDATE ON CAD SYSTEM ONLY!

METRIC — UNLESS OTHERWISE NOTED, DIMENSIONS AND TOLERANCES ARE DEFINED IN MILLIMETERS IN ACCORDANCE WITH ASME STANDARD Y14.5M - 1994

DRAWN BY: S.KOHLER	DATE: 12-10-19	MAKE FROM: .	CUSTOMER: ALL
CHECKED BY: WESTNEDGE	DATE: 12-10-19	FOR MACHINING SEE: .	SUSPENSION TYPE: .
ENG. APPROVAL: WESTNEDGE	DATE: 12-10-19	FOR ASSEMBLY SEE: .	REF. LAYOUT: .
MFG. APPROVAL: .	DATE: .	REPLACES: .	REF. BOM: .
Q.C. APPROVAL: .	DATE: .	EQUIP.: .	ORIG. MFG. DWG.: .

DESCRIPTION

EXS13 PIVOT BOLT
INSTALL DWG, NARROW (ALL NUTS OUT)

MODEL WEIGHT	PART/DWG NO.	SHEET NO.
317.6 LBS.	018122-0110	1 OF 1
SCALE 1:4		DWG. SIZE D

THIS DOCUMENT CONTAINS TECHNOLOGY SUBJECT TO THE U.S. EXPORT ADMINISTRATION REGULATIONS (15 CFR PARTS 730-774) OR U.S. INTERNATIONAL TRAFFIC IN ARMS REGULATIONS (22 CFR PARTS 121-130). PRIOR U.S. GOVERNMENT AUTHORIZATION IS REQUIRED TO RELEASE OR TRANSFER THIS TECHNOLOGY TO A FOREIGN PERSON EITHER IN THE UNITED STATES OR IN A FOREIGN COUNTRY.

APPLICATION SET UP	
AXLE WELDMENT RANGES	FAC
~~30.5~~	31.0
31.0	
~~31.5~~	
~~32.0~~	32.5
32.5	
~~33.0~~	
~~33.5~~	34.0
34.0	
~~34.5~~	
~~35.0~~	35.5
35.5	
~~36.0~~	
~~36.5~~	37.0
37.0	
~~37.5~~	
~~38.0~~	38.5
38.5	
~~39.0~~	
~~39.5~~	40.0
40.0	
~~40.5~~	
~~41.0~~	41.5
41.5	
~~42.0~~	
~~42.5~~	43.0
43.0	
~~43.5~~	
~~44.0~~	44.5
44.5	
~~45.0~~	

PAY CLOSE ATTENTION TO BOLT DIRECTION!

BOLT TORQUE SPEC: HAES 9000-023

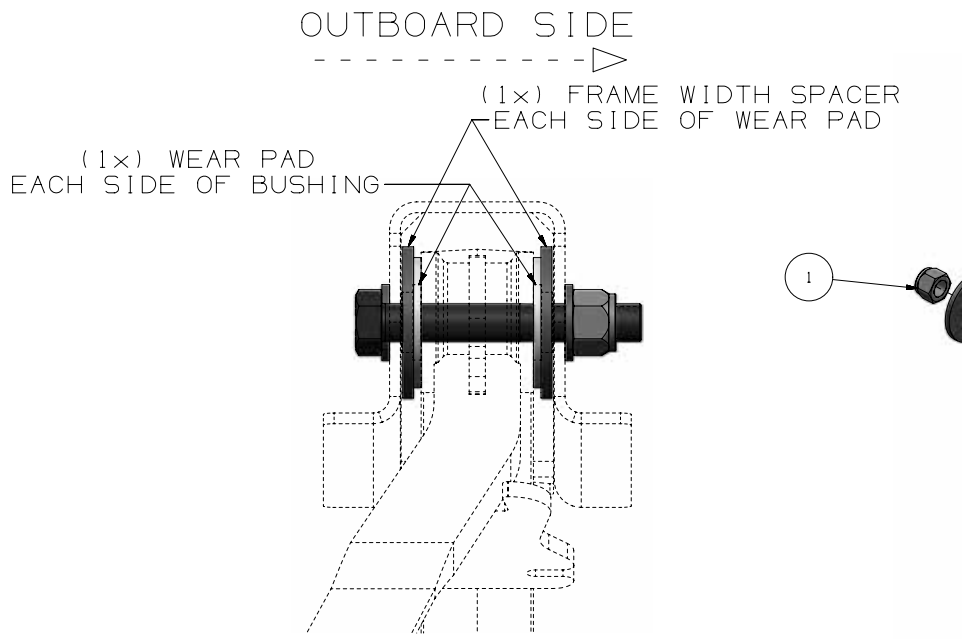

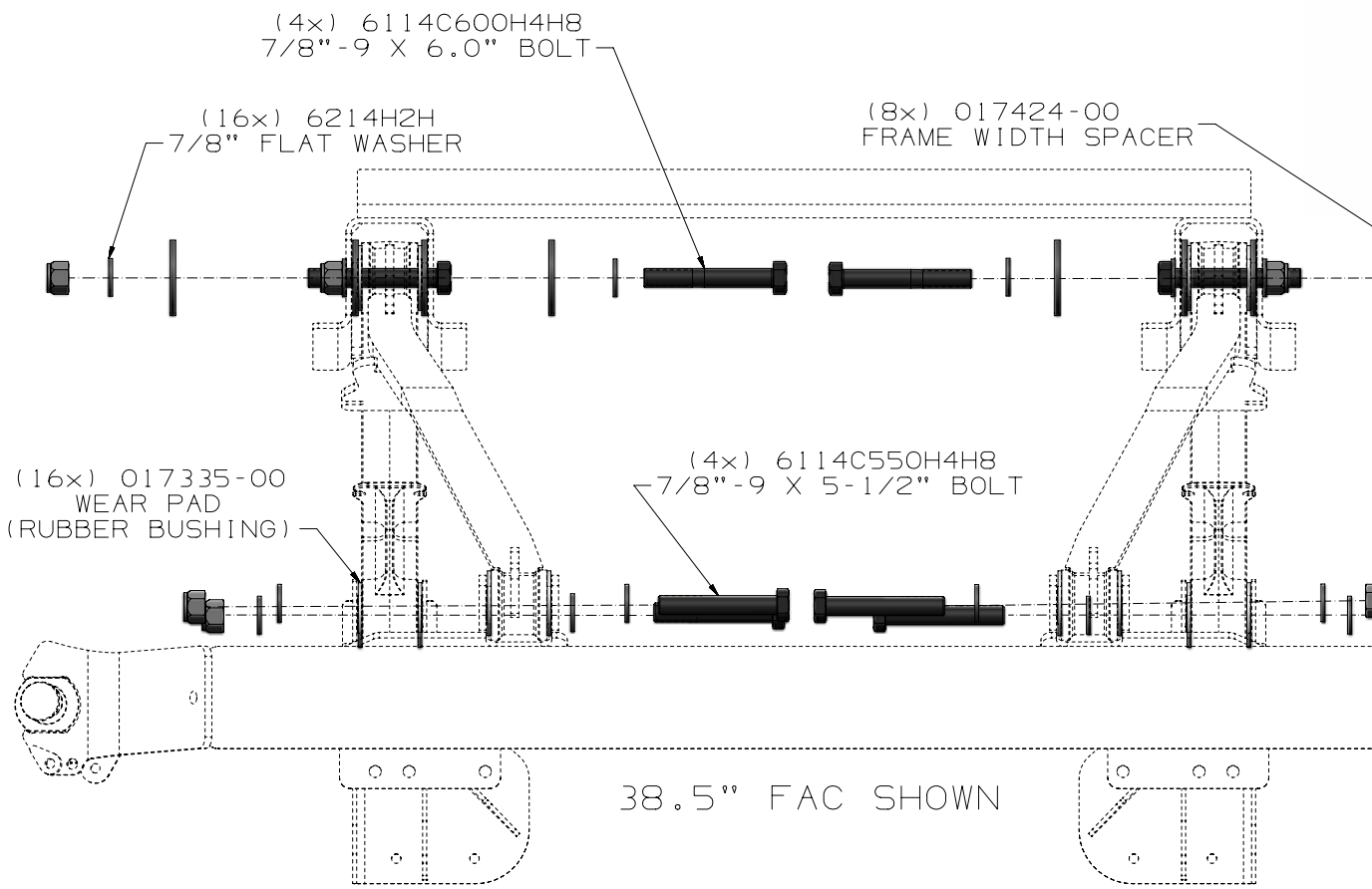

REV	ZONE	DESCRIPTION	BY / DATE	CHK / DATE	ENG / DATE	CN
A		RELEASED FOR PRODUCTION	SAK 12-10-19	A.W 12-10-19	A.W 12-10-19	19-0721

ITEM	PART NUMBER	DESCRIPTION	QTY
1	018122-0100	EXS13 TRAILER PIVOT BOLT HARDWARE KIT	1

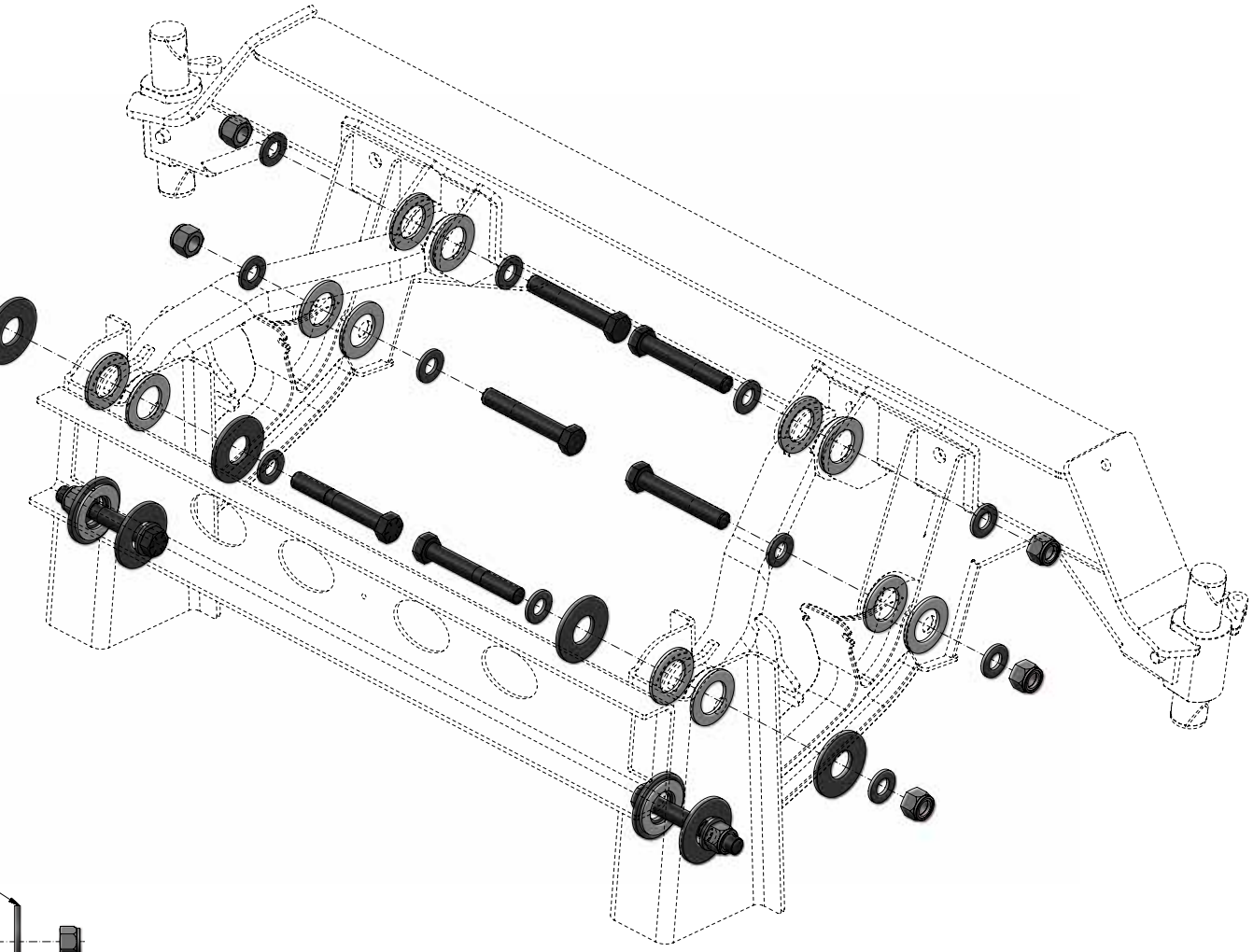

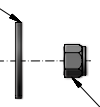

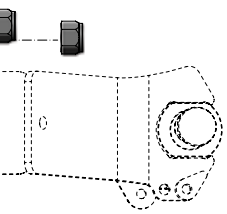

HENDRICKSON
Auxiliary Axle Systems

PRODUCTION

Copyright © 2019 Hendrickson. All Rights Reserved

THIS PRINT REMAINS THE PROPERTY OF HENDRICKSON SUSPENSION SYSTEMS. ALL INFORMATION CONTAINED THEREON IS CONFIDENTIAL. IT IS LOANED, SUBJECT TO RETURN ON DEMAND, AND ON EXPRESS CONDITION THAT IT IS NOT TO BE COPIED OR USED DIRECTLY OR INDIRECTLY FOR ANY PURPOSE OTHER THAN THE PURPOSE FOR WHICH IT HAS BEEN LOANED TO YOU.

CAD — CAD FILE UPDATE ON CAD SYSTEM ONLY!

METRIC — UNLESS OTHERWISE NOTED, DIMENSIONS AND TOLERANCES ARE DEFINED IN MILLIMETERS IN ACCORDANCE WITH ASME STANDARD Y14.5M - 1994

DRAWN BY: S.KOHLER	DATE: 12-10-19	MAKE FROM: .	CUSTOMER: ALL
CHECKED BY: WESTNEDGE	DATE: 12-10-19	FOR MACHINING SEE: .	SUSPENSION TYPE: .
ENG. APPROVAL: WESTNEDGE	DATE: 12-10-19	FOR ASSEMBLY SEE: .	REF. LAYOUT: .
MFG. APPROVAL: .	DATE: .	REPLACES: .	REF. BOM: .
Q.C. APPROVAL: .	DATE: .	EQUIP.: .	ORIG. MFG. DWG.: .

DESCRIPTION: EXS13 PIVOT BOLTS, INSTALL DWG, CENTERED (ALL NUTS OUT)

MODEL WEIGHT	PART/DWG NO.	SHEET NO.
316.4 LBS.	018122-0111	1 OF 1
SCALE 1:4		DWG. SIZE D

THIS DOCUMENT CONTAINS TECHNOLOGY SUBJECT TO THE U.S. EXPORT ADMINISTRATION REGULATIONS (15 CFR PARTS 730-774) OR U.S. INTERNATIONAL TRAFFIC IN ARMS REGULATIONS (22 CFR PARTS 121-130). PRIOR U.S. GOVERNMENT AUTHORIZATION IS REQUIRED TO RELEASE OR TRANSFER THIS TECHNOLOGY TO A FOREIGN PERSON EITHER IN THE UNITED STATES OR IN A FOREIGN COUNTRY.

APPLICATION SET UP	
AXLE WELDMENT RANGES	FAC
~~30.5~~	31.5
~~31.0~~	
31.5	
~~32.0~~	32.5
~~32.5~~	
33.0	
~~33.5~~	34.5
~~34.0~~	
34.5	
~~35.0~~	36.0
~~35.5~~	
36.0	
~~36.5~~	37.5
~~37.0~~	
37.5	
~~38.0~~	39.0
~~38.5~~	
39.0	
~~39.5~~	40.5
~~40.0~~	
40.5	
~~41.0~~	42.0
~~41.5~~	
42.0	
~~42.5~~	43.5
~~43.0~~	
43.5	
~~44.0~~	45.0
~~44.5~~	
45.0	

PAY CLOSE ATTENTION TO BOLT DIRECTION!

BOLT TORQUE SPEC: HAES 9000-023

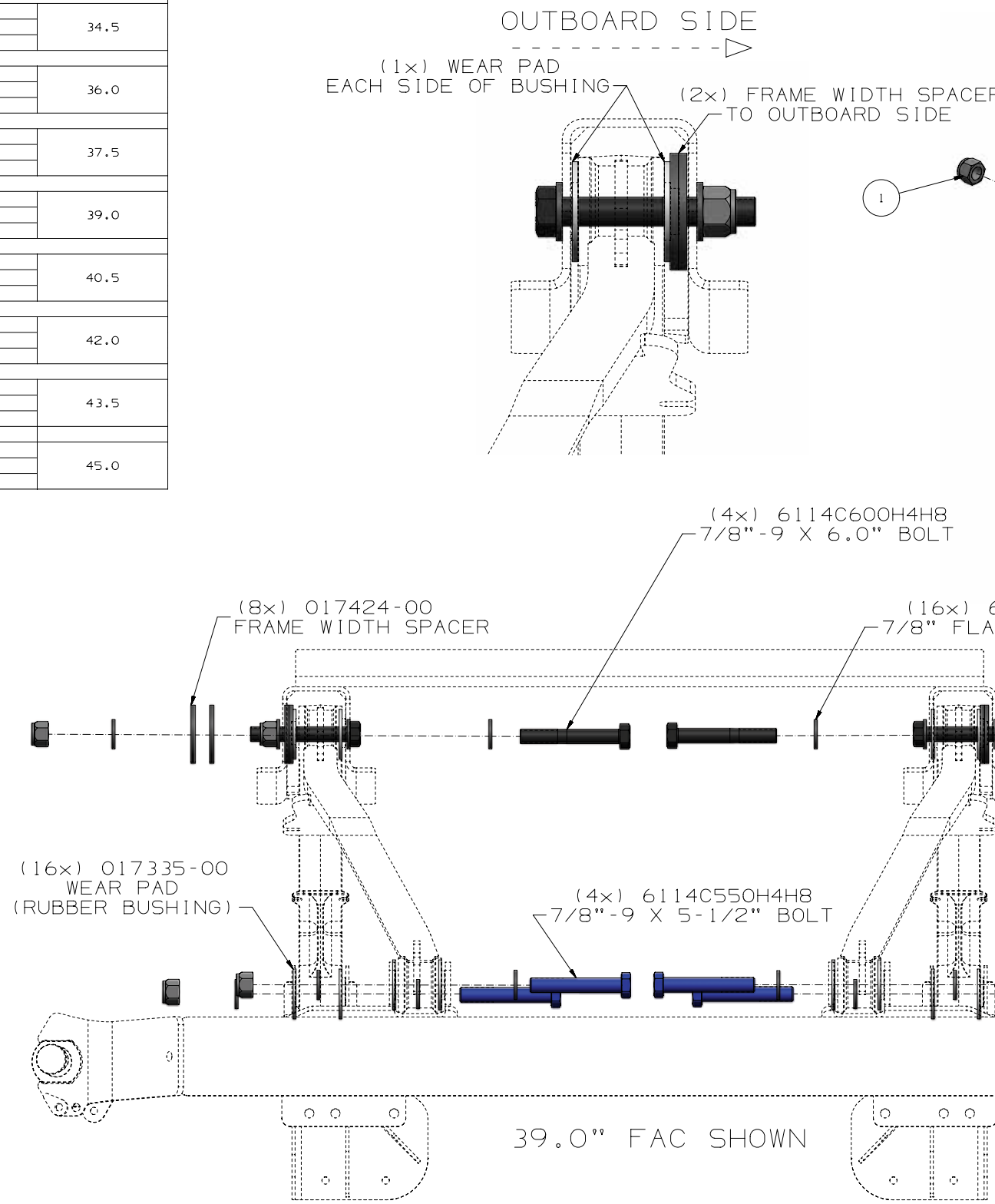

REV	ZONE	DESCRIPTION	BY / DATE	CHK / DATE	ENG / DATE	CN
A		RELEASED FOR PRODUCTION	SAK 12-10-19	A.W 12-10-19	A.W 12-10-19	19-0721

ITEM	PART NUMBER	DESCRIPTION	QTY
1	018122-0100	EXS13 TRAILER PIVOT BOLT HARDWARE KIT	1

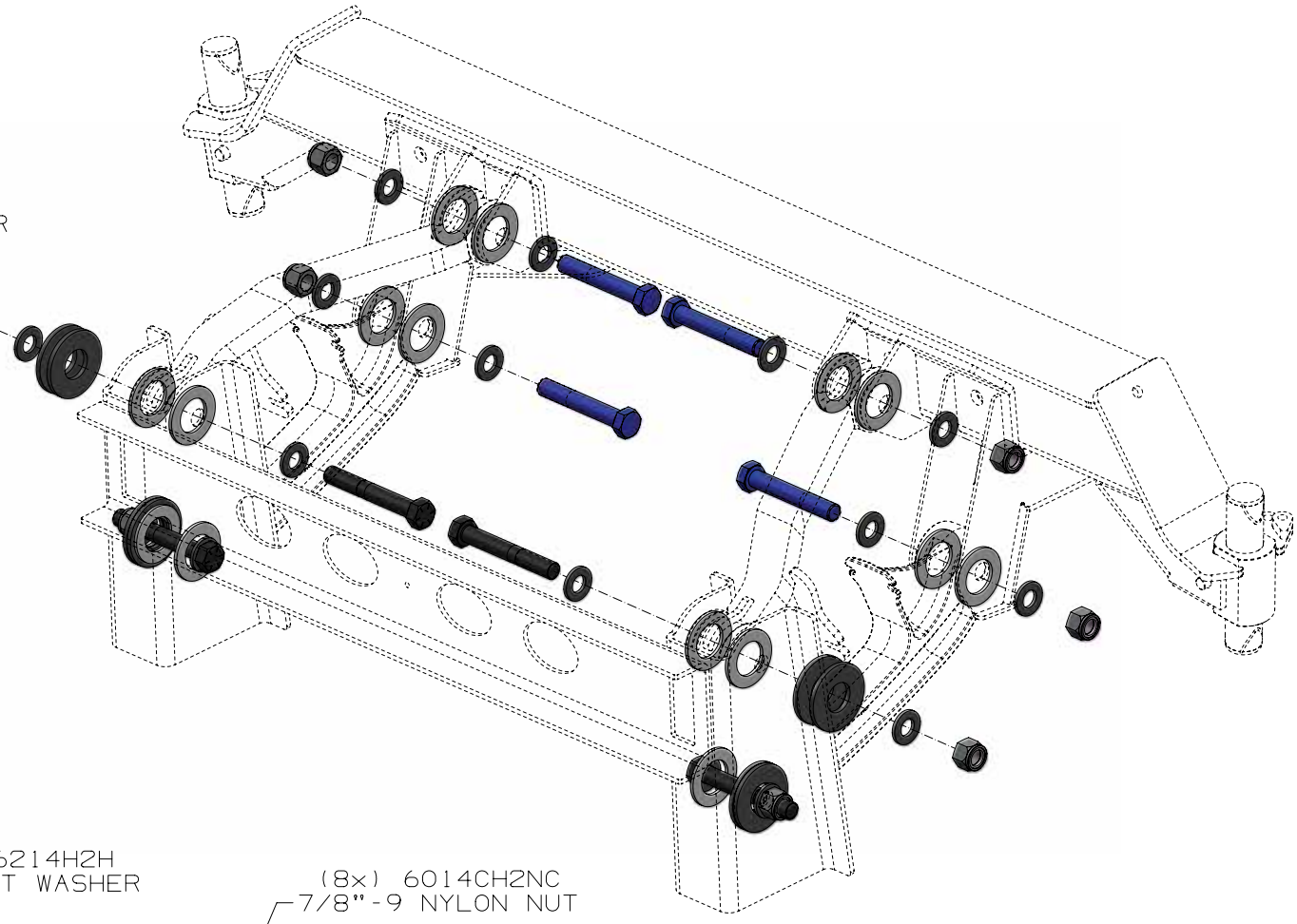

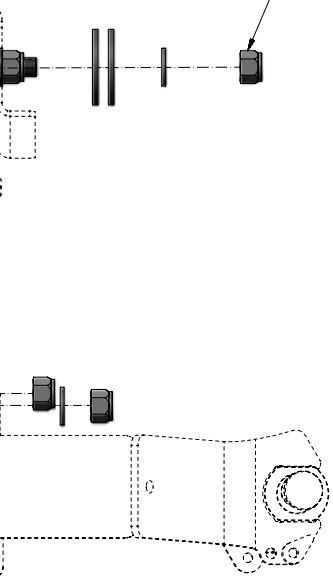

HENDRICKSON Auxiliary Axle Systems

PRODUCTION

Copyright © 2019 Hendrickson, All Rights Reserved

THIS PRINT REMAINS THE PROPERTY OF HENDRICKSON SUSPENSION SYSTEMS. ALL INFORMATION CONTAINED THEREON IS CONFIDENTIAL. IT IS LOANED, SUBJECT TO RETURN ON DEMAND, AND ON EXPRESS CONDITION THAT IT IS NOT TO BE COPIED OR USED DIRECTLY OR INDIRECTLY FOR ANY PURPOSE OTHER THAN THE PURPOSE FOR WHICH IT HAS BEEN LOANED TO YOU.

CAD — CAD FILE UPDATE ON CAD SYSTEM ONLY!

METRIC — UNLESS OTHERWISE NOTED, DIMENSIONS AND TOLERANCES ARE DEFINED IN MILLIMETERS IN ACCORDANCE WITH ASME STANDARD Y14.5M - 1994

DRAWN BY S.KOHLER	DATE 12-10-19	MAKE FROM .	CUSTOMER ALL
CHECKED BY WESTNEDGE	DATE 12-10-19	FOR MACHINING SEE .	SUSPENSION TYPE .
ENG. APPROVAL WESTNEDGE	DATE 12-10-19	FOR ASSEMBLY SEE .	REF. LAYOUT .
MFG. APPROVAL .	DATE .	REPLACES .	REF. BOM .
Q.C. APPROVAL .	DATE .	EQUIP. .	ORIG. MFG. DWG. .

DESCRIPTION

EXS13 PIVOT BOLT
INSTALL DWG, WIDE (ALL NUTS OUT)

MODEL WEIGHT	PART/DWG NO.	SHEET NO.
316.4 LBS.	018122-0112	1 OF 1
SCALE 1:4		DWG. SIZE D

THIS DOCUMENT CONTAINS TECHNOLOGY SUBJECT TO THE U.S. EXPORT ADMINISTRATION REGULATIONS (15 CFR PARTS 730-774) OR U.S. INTERNATIONAL TRAFFIC IN ARMS REGULATIONS (22 CFR PARTS 121-130). PRIOR U.S. GOVERNMENT AUTHORIZATION IS REQUIRED TO RELEASE OR TRANSFER THIS TECHNOLOGY TO A

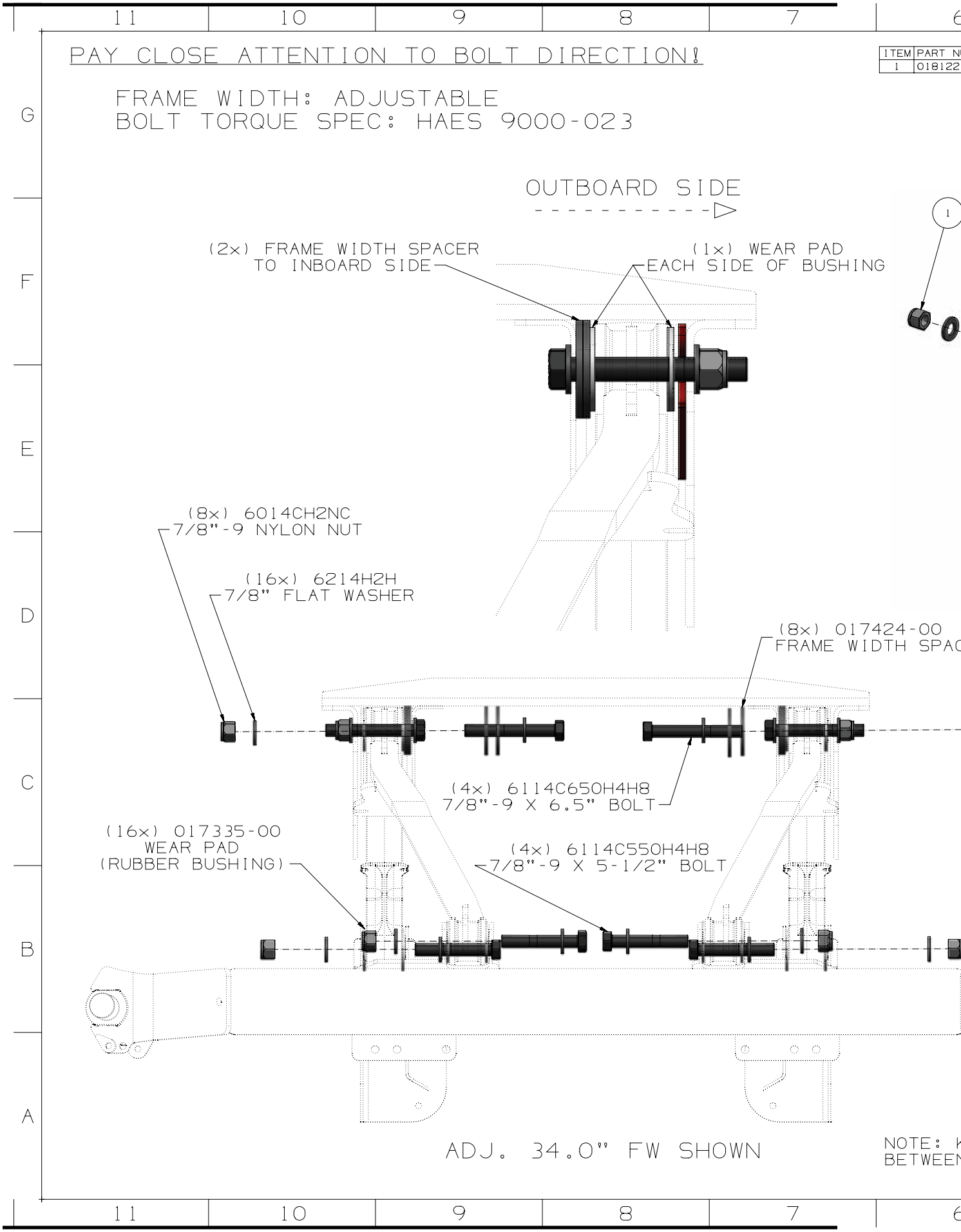
PAY CLOSE ATTENTION TO BOLT DIRECTION!
ITEM
PART NU
1
018122
FRAME WIDTH: ADJUSTABLE
BOLT TORQUE SPEC: HAES 9000-023
OUTBOARD SIDE
(2x) FRAME WIDTH SPACER
TO INBOARD SIDE
(1x) WEAR PAD
EACH SIDE OF BUSHING
(8x) 6014CH2NC
7/8"-9 NYLON NUT
(16x) 6214H2H
7/8" FLAT WASHER
(8x) 017424-00
FRAME WIDTH SPAC
(4x) 6114C650H4H8
7/8"-9 X 6.5" BOLT
(16x) 017335-00
WEAR PAD
(RUBBER BUSHING)
(4x) 6114C550H4H8
7/8"-9 X 5-1/2" BOLT
ADJ. 34.0" FW SHOWN
NOTE: K
BETWEEN

UMBER	DESCRIPTION	QTY
-0400	EXS13 TRUCK-ADJ PIVOT BOLT HARDWARE KIT	1

REV	ZONE	DESCRIPTION	BY / DATE	CHK / DATE	ENG / DATE	CN
A		RELEASED FOR PRODUCTION	SAK 03-21-19	A.W 03-21-19	A.W 03-21-19	19-0 204

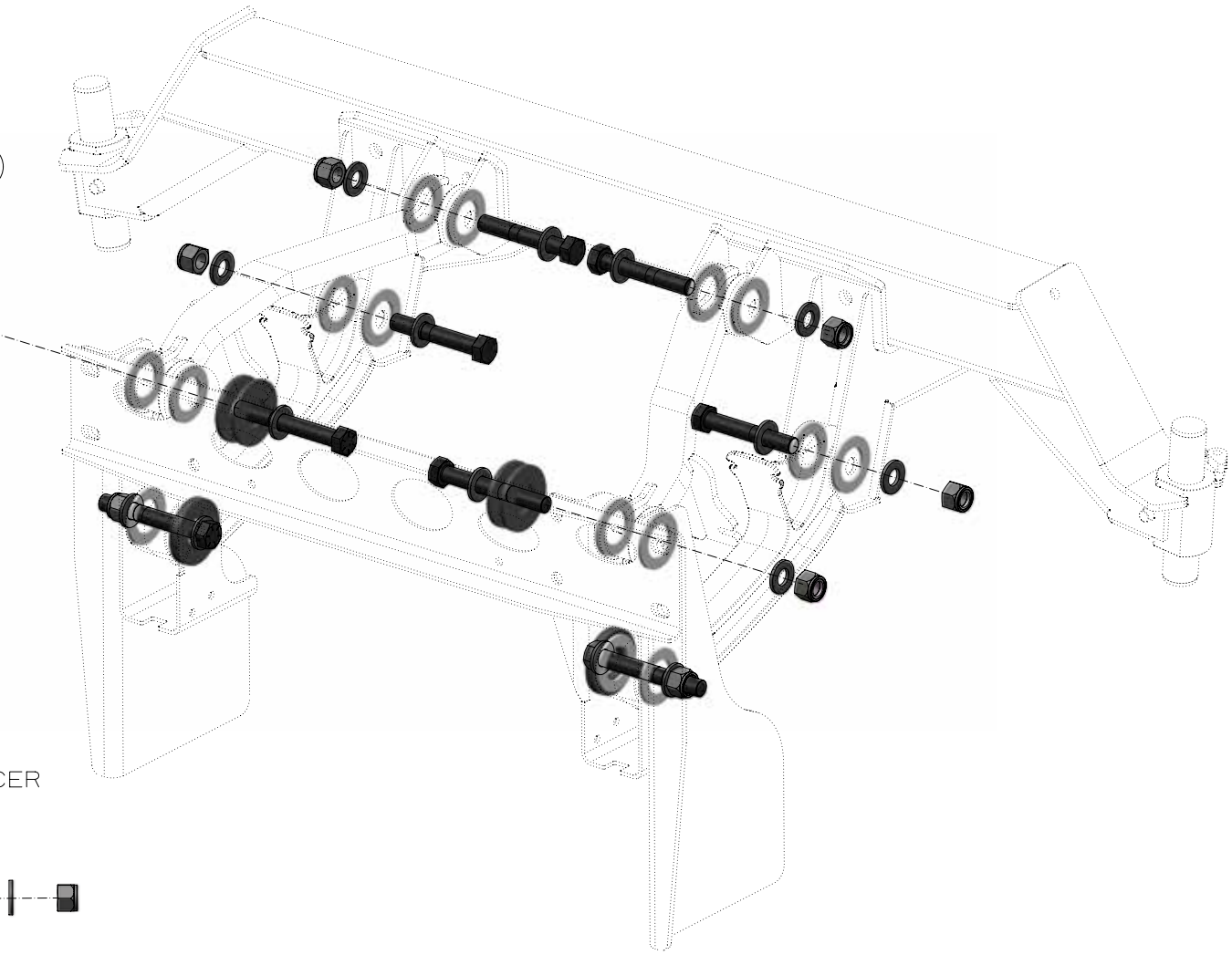

CER

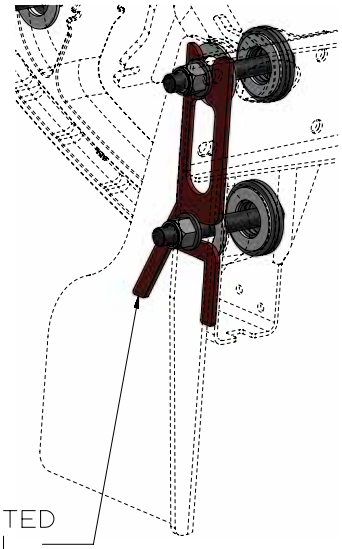

K-SPACERS (008299) TO BE LOCATED
N THE SADDLE AND THE SIDE RAIL

HENDRICKSON
Auxiliary Axle Systems

PRODUCTION

Copyright © 2019 Hendrickson, All Rights Reserved

THIS PRINT REMAINS THE PROPERTY OF HENDRICKSON SUSPENSION SYSTEMS. ALL INFORMATION CONTAINED THEREON IS CONFIDENTIAL. IT IS LOANED, SUBJECT TO RETURN ON DEMAND, AND ON EXPRESS CONDITION THAT IT IS NOT TO BE COPIED OR USED DIRECTLY OR INDIRECTLY FOR ANY PURPOSE OTHER THAN THE PURPOSE FOR WHICH IT HAS BEEN LOANED TO YOU.

CAD — CAD FILE UPDATE ON CAD SYSTEM ONLY!

METRIC — UNLESS OTHERWISE NOTED, DIMENSIONS AND TOLERANCES ARE DEFINED IN MILLIMETERS IN ACCORDANCE WITH ASME STANDARD Y14.5M - 1994

DRAWN BY S.KOHLER	DATE 03-21-19	MAKE FROM .	CUSTOMER ALL
CHECKED BY WESTNEDGE	DATE 03-21-19	FOR MACHINING SEE .	SUSPENSION TYPE .
ENG. APPROVAL WESTNEDGE	DATE 03-21-19	FOR ASSEMBLY SEE .	REF. LAYOUT .
MFG. APPROVAL .	DATE .	REPLACES .	REF. BOM .
Q.C. APPROVAL .	DATE .	EQUIP. .	ORIG. MFG. DWG. .

DESCRIPTION: EXS13 TRUCK ADJUSTABLE PIVOT BOLTS INSTALL DWG

MODEL WEIGHT	PART/DWG NO.	SHEET NO.
143.5 LBS.	018122-0401	1 OF 1
SCALE 1:4		DWG. SIZE D

THIS DOCUMENT CONTAINS TECHNOLOGY SUBJECT TO THE U.S. EXPORT ADMINISTRATION REGULATIONS (15 CFR PARTS 730-774) OR U.S. INTERNATIONAL TRAFFIC IN ARMS REGULATIONS (22 CFR PARTS 121-130). PRIOR U.S. GOVERNMENT AUTHORIZATION IS REQUIRED TO RELEASE OR TRANSFER THIS TECHNOLOGY TO A FOREIGN PERSON EITHER IN THE UNITED STATES OR IN A FOREIGN COUNTRY.

INDEX

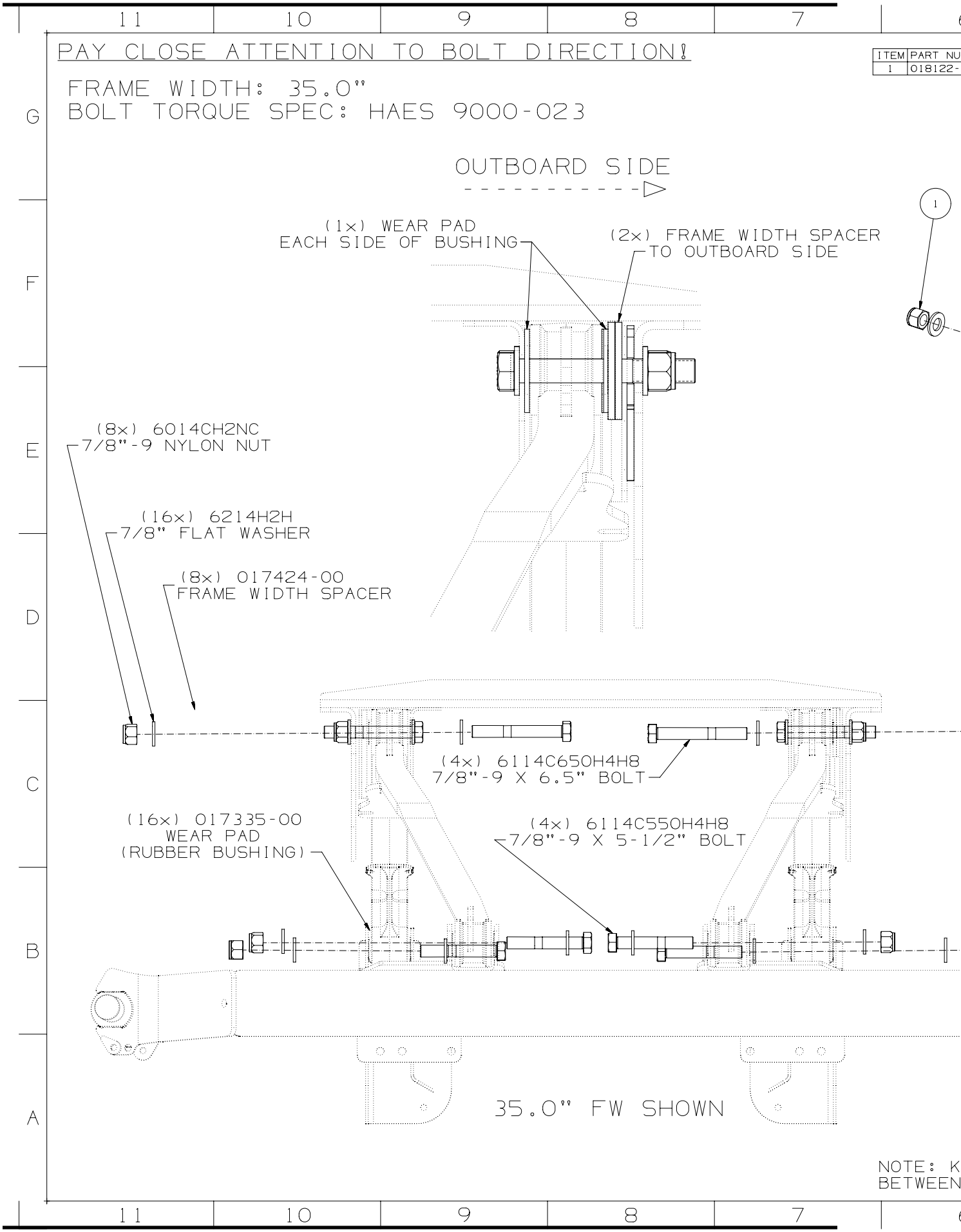
PAY CLOSE ATTENTION TO BOLT DIRECTION!
FRAME WIDTH: 35.0"
BOLT TORQUE SPEC: HAES 9000-023
OUTBOARD SIDE
(1x) WEAR PAD
EACH SIDE OF BUSHING
(2x) FRAME WIDTH SPACER
TO OUTBOARD SIDE
(8x) 6014CH2NC
7/8"-9 NYLON NUT
(16x) 6214H2H
7/8" FLAT WASHER
(8x) 017424-00
FRAME WIDTH SPACER
(4x) 6114C650H4H8
7/8"-9 X 6.5" BOLT
(16x) 017335-00
WEAR PAD
(RUBBER BUSHING)
(4x) 6114C550H4H8
7/8"-9 X 5-1/2" BOLT
35.0" FW SHOWN
ITEM
PART NU
1
018122-
NOTE: K
BETWEEN

MBER	DESCRIPTION	QTY
0400	EXS13 TRUCK-ADJ PIVOT BOLT HARDWARE KIT	1

REV	ZONE	DESCRIPTION	BY / DATE	CHK / DATE	ENG / DATE	CN
A		RELEASED FOR PRODUCTION	SAK 03-25-19	A.W 03-25-19	A.W 03-25-19	19-0 204

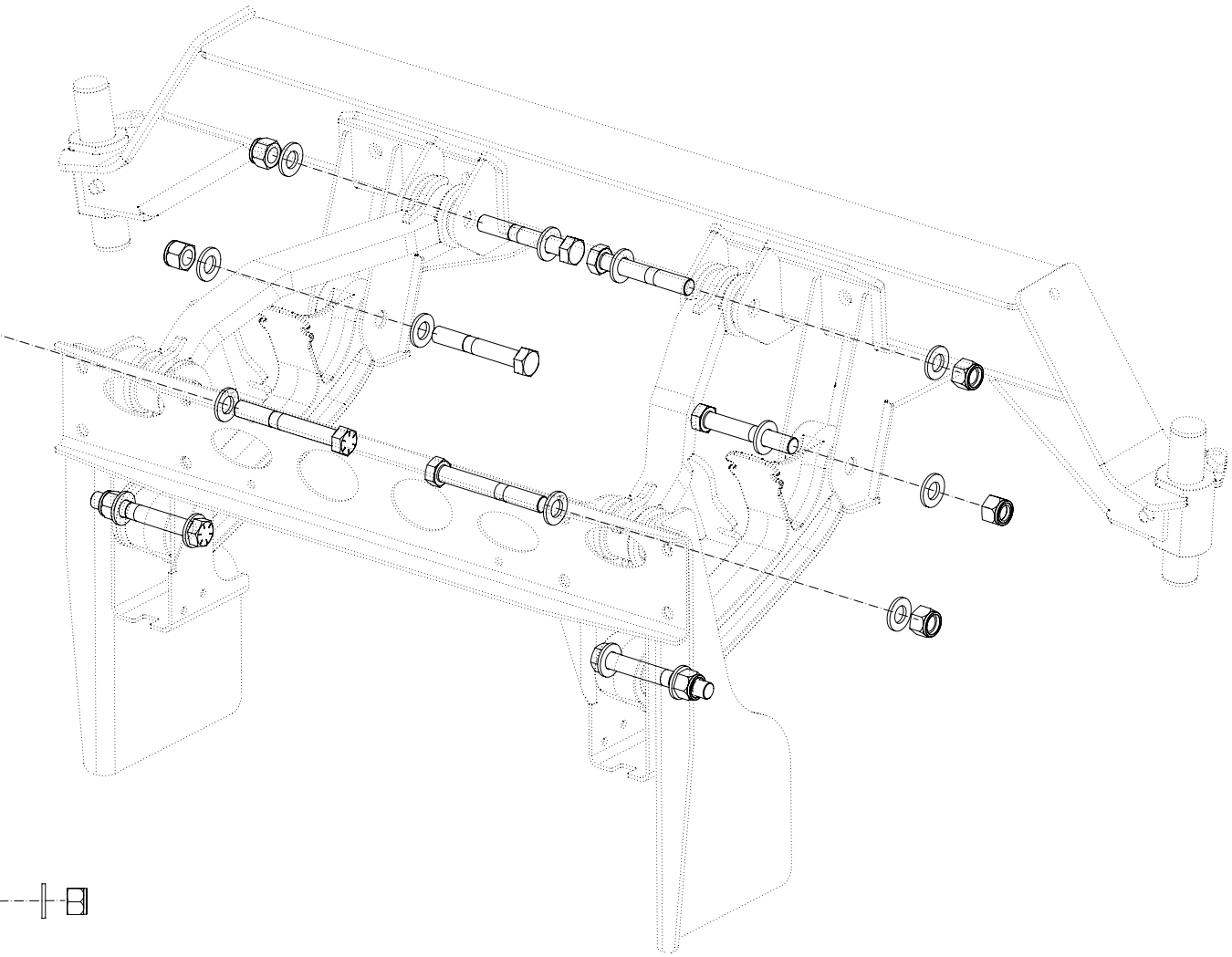

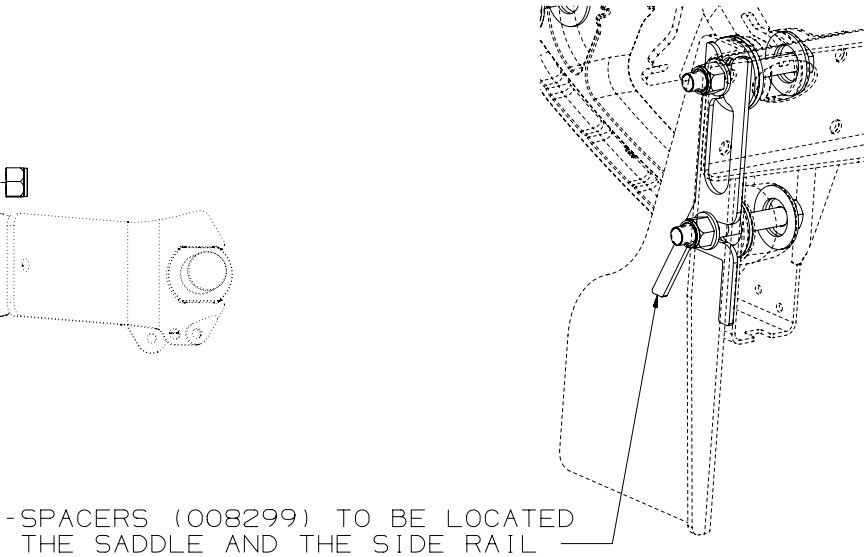

HENDRICKSON
Auxiliary Axle Systems

PRODUCTION

Copyright © 2019 Hendrickson, All Rights Reserved

THIS PRINT REMAINS THE PROPERTY OF HENDRICKSON SUSPENSION SYSTEMS. ALL INFORMATION CONTAINED THEREON IS CONFIDENTIAL. IT IS LOANED, SUBJECT TO RETURN ON DEMAND, AND ON EXPRESS CONDITION THAT IT IS NOT TO BE COPIED OR USED DIRECTLY OR INDIRECTLY FOR ANY PURPOSE OTHER THAN THE PURPOSE FOR WHICH IT HAS BEEN LOANED TO YOU.

CAD — CAD FILE UPDATE ON CAD SYSTEM ONLY!

METRIC — UNLESS OTHERWISE NOTED, DIMENSIONS AND TOLERANCES ARE DEFINED IN MILLIMETERS IN ACCORDANCE WITH ASME STANDARD Y14.5M - 1994

DRAWN BY S.KOHLER	DATE 03-25-19	MAKE FROM .	CUSTOMER ALL
CHECKED BY WESTNEDGE	DATE 03-25-19	FOR MACHINING SEE .	SUSPENSION TYPE .
ENG. APPROVAL WESTNEDGE	DATE 03-25-19	FOR ASSEMBLY SEE .	REF. LAYOUT .
MFG. APPROVAL .	DATE .	REPLACES .	REF. BOM .
Q.C. APPROVAL .	DATE .	EQUIP. .	ORIG. MFG. DWG. .

DESCRIPTION: EXS13 TRUCK 35.0" FW PIVOT BOLT INSTALL DWG

MODEL WEIGHT	PART/DWG NO.	SHEET NO.
143.5 LBS.	018122-0402	1 OF 1
SCALE 1:4		DWG. SIZE D

THIS DOCUMENT CONTAINS TECHNOLOGY SUBJECT TO THE U.S. EXPORT ADMINISTRATION REGULATIONS (15 CFR PARTS 730-774) OR U.S. INTERNATIONAL TRAFFIC IN ARMS REGULATIONS (22 CFR PARTS 121-130). PRIOR U.S. GOVERNMENT AUTHORIZATION IS REQUIRED TO RELEASE OR TRANSFER THIS TECHNOLOGY TO A FOREIGN PERSON EITHER IN THE UNITED STATES OR IN A FOREIGN COUNTRY.

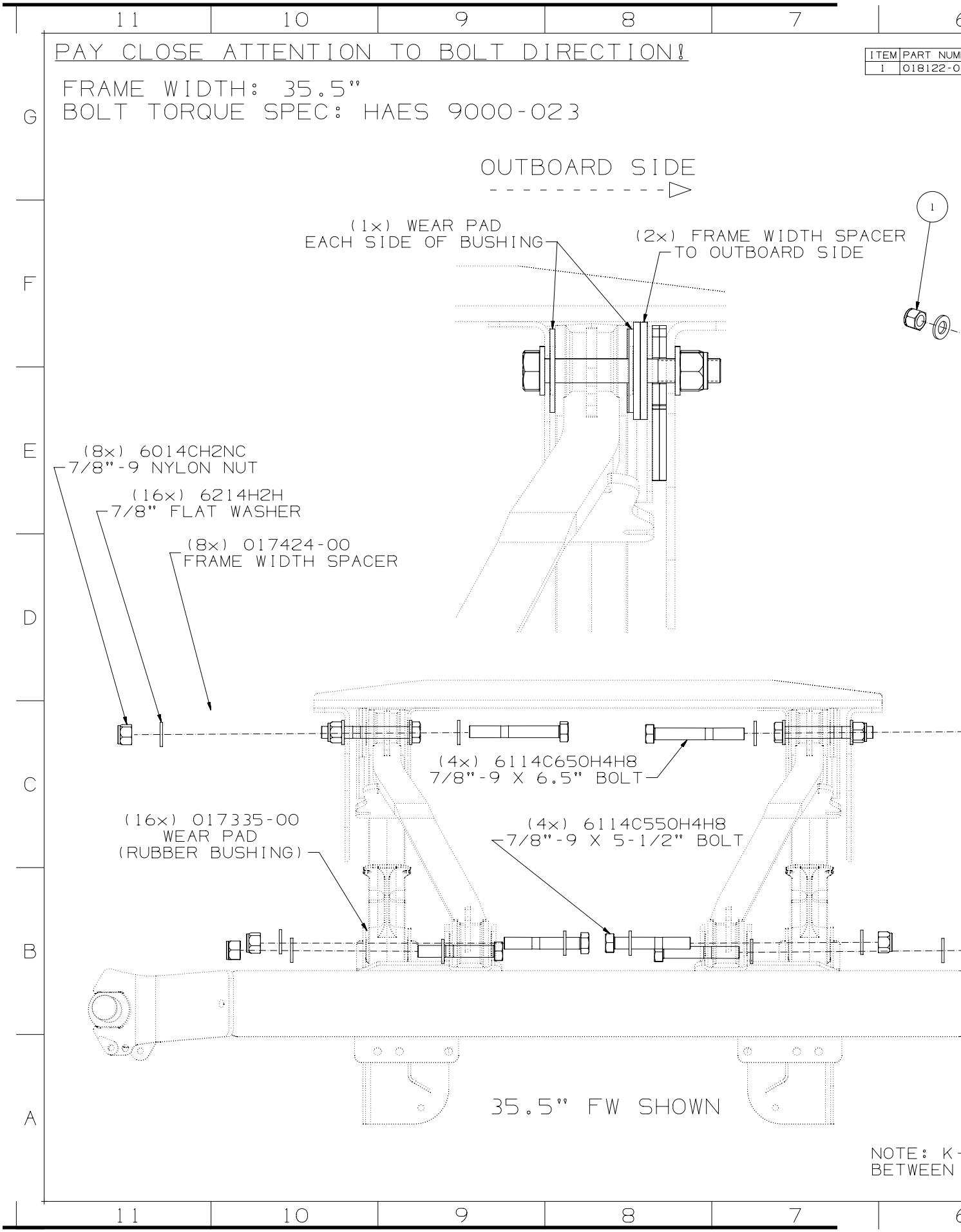
PAY CLOSE ATTENTION TO BOLT DIRECTION!
FRAME WIDTH: 35.5"
BOLT TORQUE SPEC: HAES 9000-023
OUTBOARD SIDE
(1x) WEAR PAD
EACH SIDE OF BUSHING
(2x) FRAME WIDTH SPACER
TO OUTBOARD SIDE
(8x) 6014CH2NC
7/8"-9 NYLON NUT
(16x) 6214H2H
7/8" FLAT WASHER
(8x) 017424-00
FRAME WIDTH SPACER
(4x) 6114C650H4H8
7/8"-9 X 6.5" BOLT
(16x) 017335-00
WEAR PAD
(RUBBER BUSHING)
(4x) 6114C550H4H8
7/8"-9 X 5-1/2" BOLT
35.5" FW SHOWN
ITEM
PART NUM
1
018122-0
NOTE: K-
BETWEEN

BER	DESCRIPTION	QTY
400	EXS13 TRUCK-ADJ PIVOT BOLT HARDWARE KIT	1

REV	ZONE	DESCRIPTION	BY / DATE	CHK / DATE	ENG / DATE	CN
A		RELEASED FOR PRODUCTION	SAK 03-25-19	A.W 03-25-19	A.W 03-25-19	19-0204

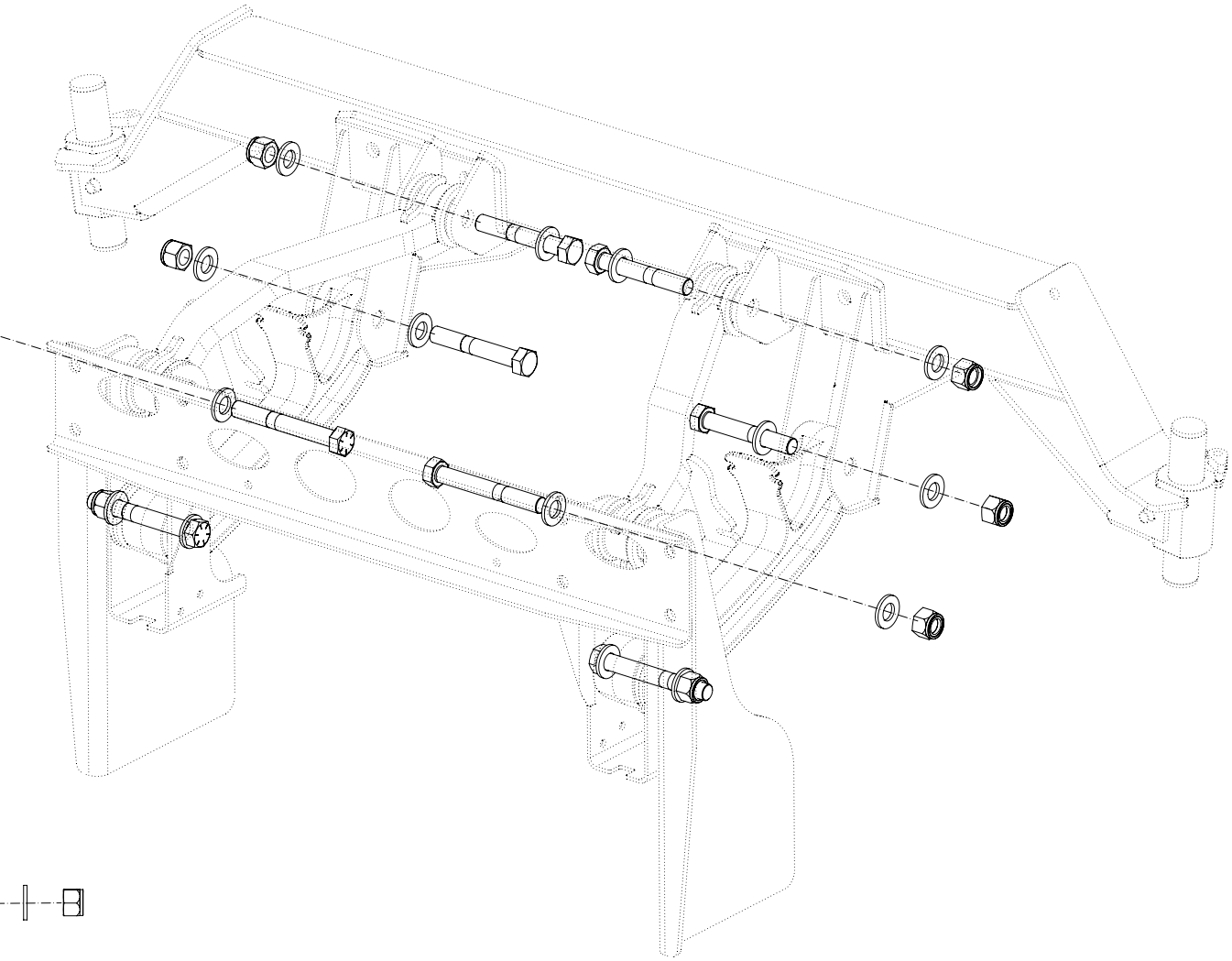

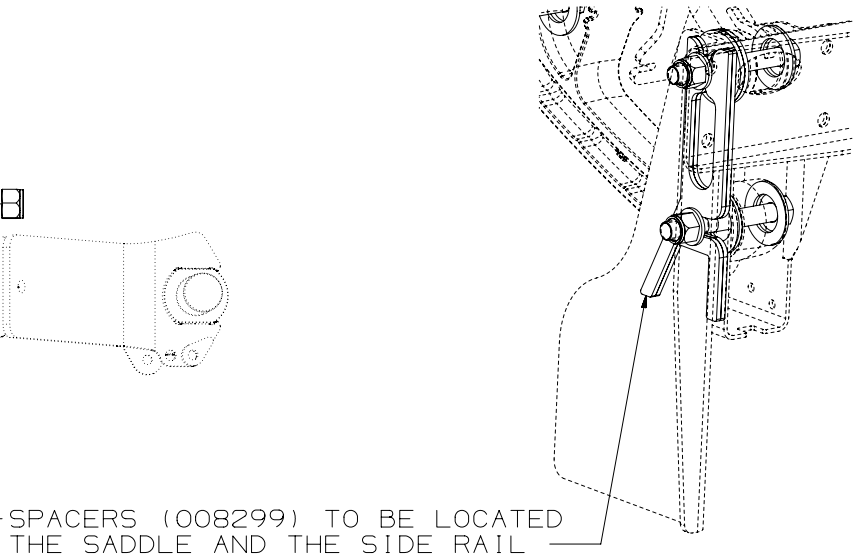

HENDRICKSON
Auxiliary Axle Systems

PRODUCTION

Copyright © 2019 Hendrickson. All Rights Reserved

THIS PRINT REMAINS THE PROPERTY OF HENDRICKSON SUSPENSION SYSTEMS. ALL INFORMATION CONTAINED THEREON IS CONFIDENTIAL. IT IS LOANED, SUBJECT TO RETURN ON DEMAND, AND ON EXPRESS CONDITION THAT IT IS NOT TO BE COPIED OR USED DIRECTLY OR INDIRECTLY FOR ANY PURPOSE OTHER THAN THE PURPOSE FOR WHICH IT HAS BEEN LOANED TO YOU.

CAD — CAD FILE UPDATE ON CAD SYSTEM ONLY!

METRIC — UNLESS OTHERWISE NOTED, DIMENSIONS AND TOLERANCES ARE DEFINED IN MILLIMETERS IN ACCORDANCE WITH ASME STANDARD Y14.5M - 1994

DRAWN BY S.KOHLER	DATE 03-25-19	MAKE FROM .	CUSTOMER ALL
CHECKED BY WESTNEDGE	DATE 03-25-19	FOR MACHINING SEE .	SUSPENSION TYPE .
ENG. APPROVAL WESTNEDGE	DATE 03-25-19	FOR ASSEMBLY SEE .	REF. LAYOUT .
MFG. APPROVAL .	DATE .	REPLACES .	REF. BOM .
Q.C. APPROVAL .	DATE .	EQUIP. .	ORIG. MFG. DWG. .

DESCRIPTION: EXS13 TRUCK 35.5" FW PIVOT BOLT INSTALL DWG

MODEL WEIGHT	PART/DWG NO.	SHEET NO.
143.5 LBS.	018122-0403	1 OF 1
SCALE 1:4		DWG. SIZE D

THIS DOCUMENT CONTAINS TECHNOLOGY SUBJECT TO THE U.S. EXPORT ADMINISTRATION REGULATIONS (15 CFR PARTS 730-774) OR U.S. INTERNATIONAL TRAFFIC IN ARMS REGULATIONS (22 CFR PARTS 121-130). PRIOR U.S. GOVERNMENT AUTHORIZATION IS REQUIRED TO RELEASE OR TRANSFER THIS TECHNOLOGY TO A FOREIGN PERSON EITHER IN THE UNITED STATES OR IN A FOREIGN COUNTRY.

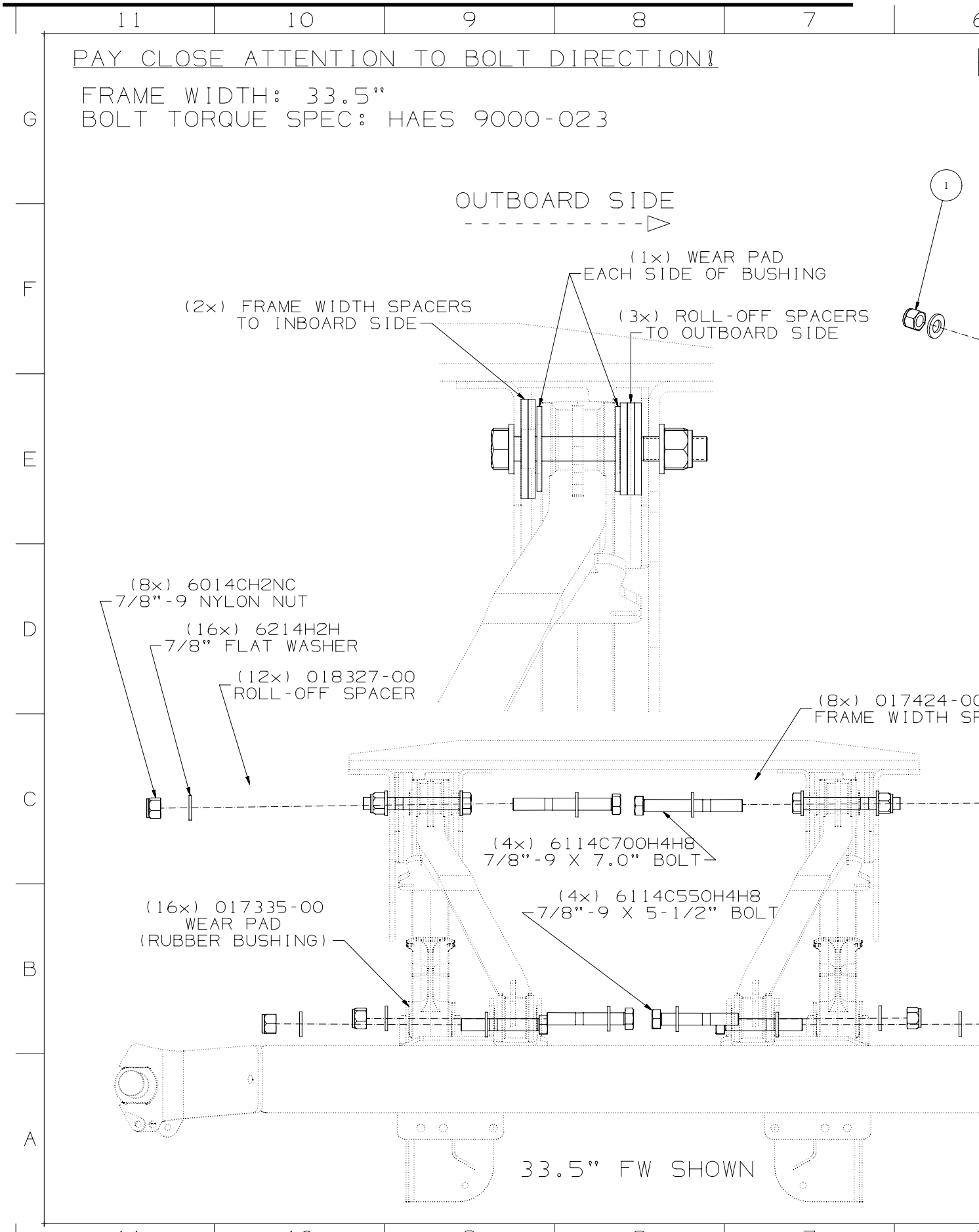
PAY CLOSE ATTENTION TO BOLT DIRECTION!
FRAME WIDTH: 33.5"
BOLT TORQUE SPEC: HAES 9000-023
OUTBOARD SIDE
(1x) WEAR PAD
EACH SIDE OF BUSHING
(2x) FRAME WIDTH SPACERS
TO INBOARD SIDE
(3x) ROLL-OFF SPACERS
TO OUTBOARD SIDE
(8x) 6014CH2NC
7/8"-9 NYLON NUT
(16x) 6214H2H
7/8" FLAT WASHER
(12x) 018327-00
ROLL-OFF SPACER
(8x) 017424-00
FRAME WIDTH SP
(4x) 6114C700H4H8
7/8"-9 X 7.0" BOLT
(4x) 6114C550H4H8
7/8"-9 X 5-1/2" BOLT
(16x) 017335-00
WEAR PAD
(RUBBER BUSHING)
33.5" FW SHOWN

ITEM	PART NUMBER	DESCRIPTION	QTY
1	018122-0500	EXS13 ROLL-OFF PIVOT BOLT HARDWARE KIT	1

REV	ZONE	DESCRIPTION	BY / DATE	CHK / DATE	ENG / DATE	CN
A		RELEASED FOR PRODUCTION	SAK 03-28-19	A.W. 03-28-19	A.W. 03-28-19	19-0204

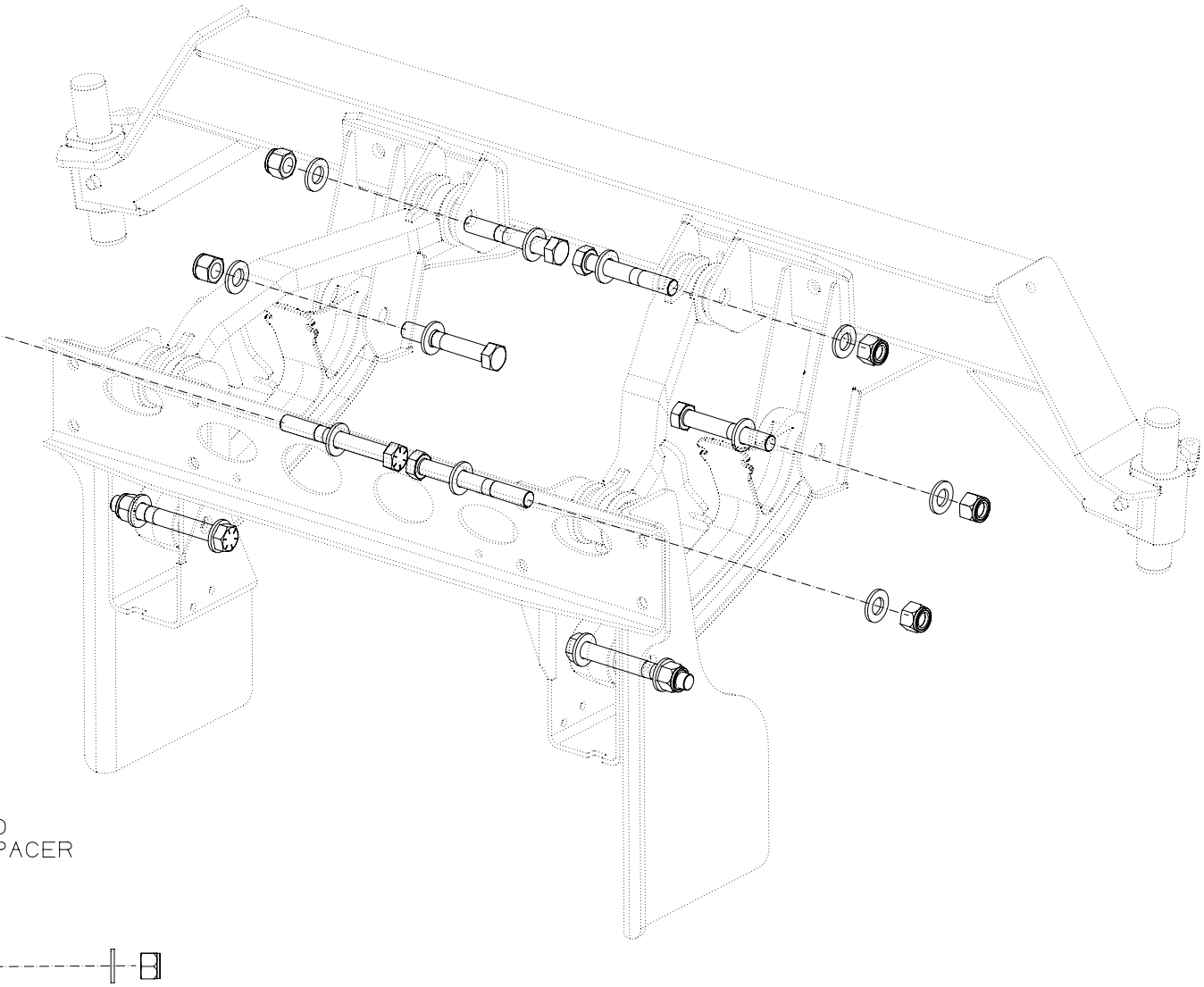

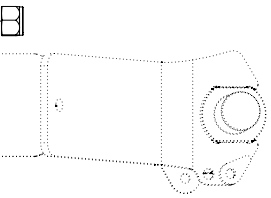

HENDRICKSON
Auxiliary Axle Systems

PRODUCTION

Copyright © 2019 Hendrickson. All Rights Reserved

THIS PRINT REMAINS THE PROPERTY OF HENDRICKSON SUSPENSION SYSTEMS. ALL INFORMATION CONTAINED THEREON IS CONFIDENTIAL. IT IS LOANED, SUBJECT TO RETURN ON DEMAND, AND ON EXPRESS CONDITION THAT IT IS NOT TO BE COPIED OR USED DIRECTLY OR INDIRECTLY FOR ANY PURPOSE OTHER THAN THE PURPOSE FOR WHICH IT HAS BEEN LOANED TO YOU.

CAD — CAD FILE UPDATE ON CAD SYSTEM ONLY!

METRIC — UNLESS OTHERWISE NOTED, DIMENSIONS AND TOLERANCES ARE DEFINED IN MILLIMETERS IN ACCORDANCE WITH ASME STANDARD Y14.5M - 1994

DRAWN BY: S.KOHLER	DATE: 03-28-19	MAKE FROM: .	CUSTOMER: ALL
CHECKED BY: WESTNEDGE	DATE: 03-28-19	FOR MACHINING SEE: .	SUSPENSION TYPE: .
ENG. APPROVAL: WESTNEDGE	DATE: 03-28-19	FOR ASSEMBLY SEE: .	REF. LAYOUT: .
MFG. APPROVAL: .	DATE: .	REPLACES: .	REF. BOM: .
Q.C. APPROVAL: .	DATE: .	EQUIP.: .	ORIG. MFG. DWG.: .

DESCRIPTION

EXS13 ROLL-OFF
PIVOT BOLTS INSTALL DWG, NARROW

MODEL WEIGHT	PART/DWG NO.	SHEET NO.
143.5 LBS.	018122-0501	1 OF 1
SCALE 1:4		DWG. SIZE D

THIS DOCUMENT CONTAINS TECHNOLOGY SUBJECT TO THE U.S. EXPORT ADMINISTRATION REGULATIONS (15 CFR PARTS 730-774) OR U.S. INTERNATIONAL TRAFFIC IN ARMS REGULATIONS (22 CFR PARTS 121-130). PRIOR U.S. GOVERNMENT AUTHORIZATION IS REQUIRED TO RELEASE OR TRANSFER THIS TECHNOLOGY TO A FOREIGN PERSON EITHER IN THE UNITED STATES OR IN A FOREIGN COUNTRY.

PAY CLOSE ATTENTION TO BOLT DIRECTION!

ITEM	PART NUMBER	
1	018122-0500	EXS

FRAME WIDTH: 34.0"
BOLT TORQUE SPEC: HAES 9000-023

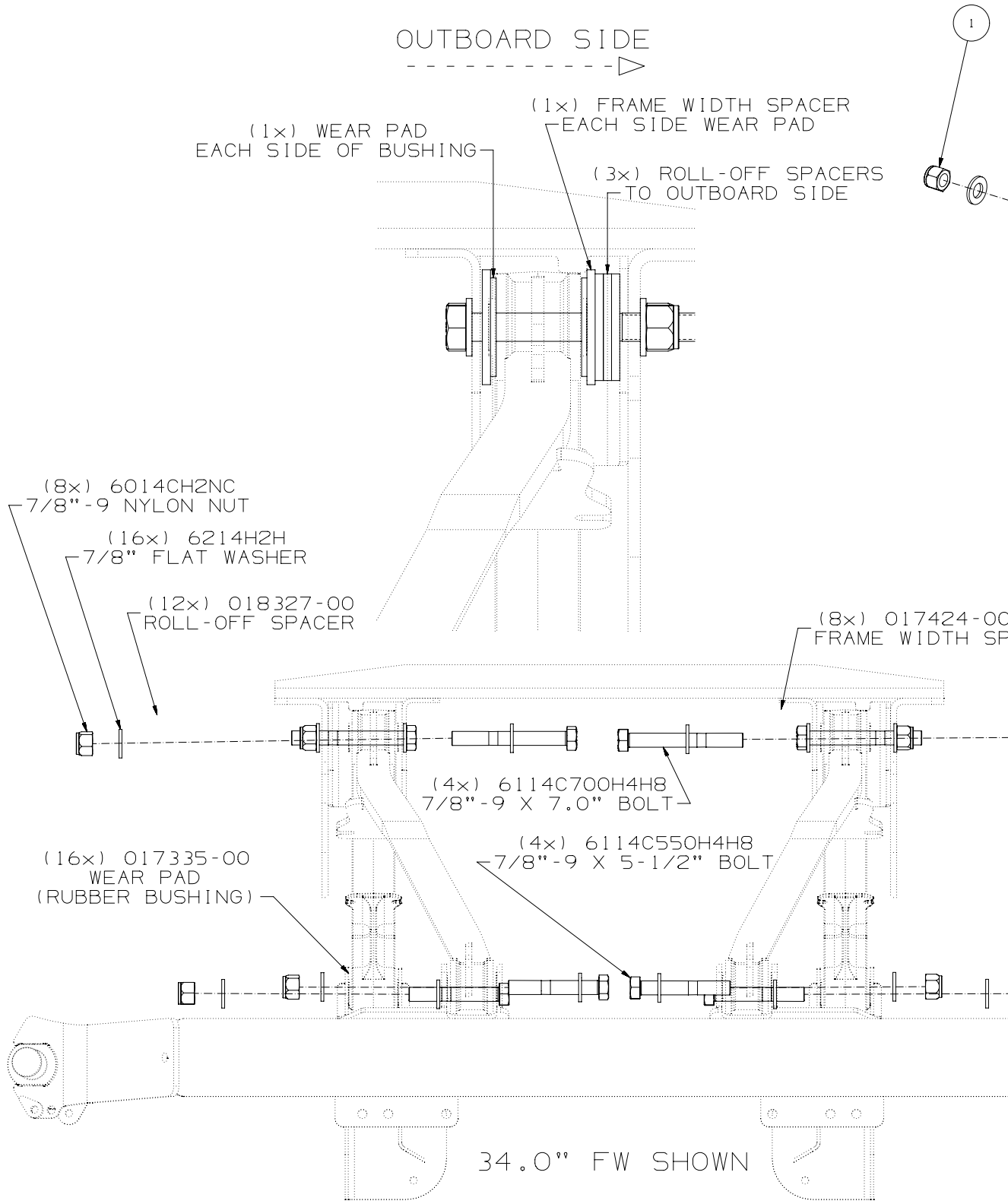

REV	ZONE	DESCRIPTION	BY / DATE	CHK / DATE	ENG / DATE	CN
A		RELEASED FOR PRODUCTION	SAK 03-26-19	A.W 03-26-19	A.W 03-26-19	19-0204

DESCRIPTION	QTY
13 ROLL-OFF PIVOT BOLT HARDWARE KIT	1

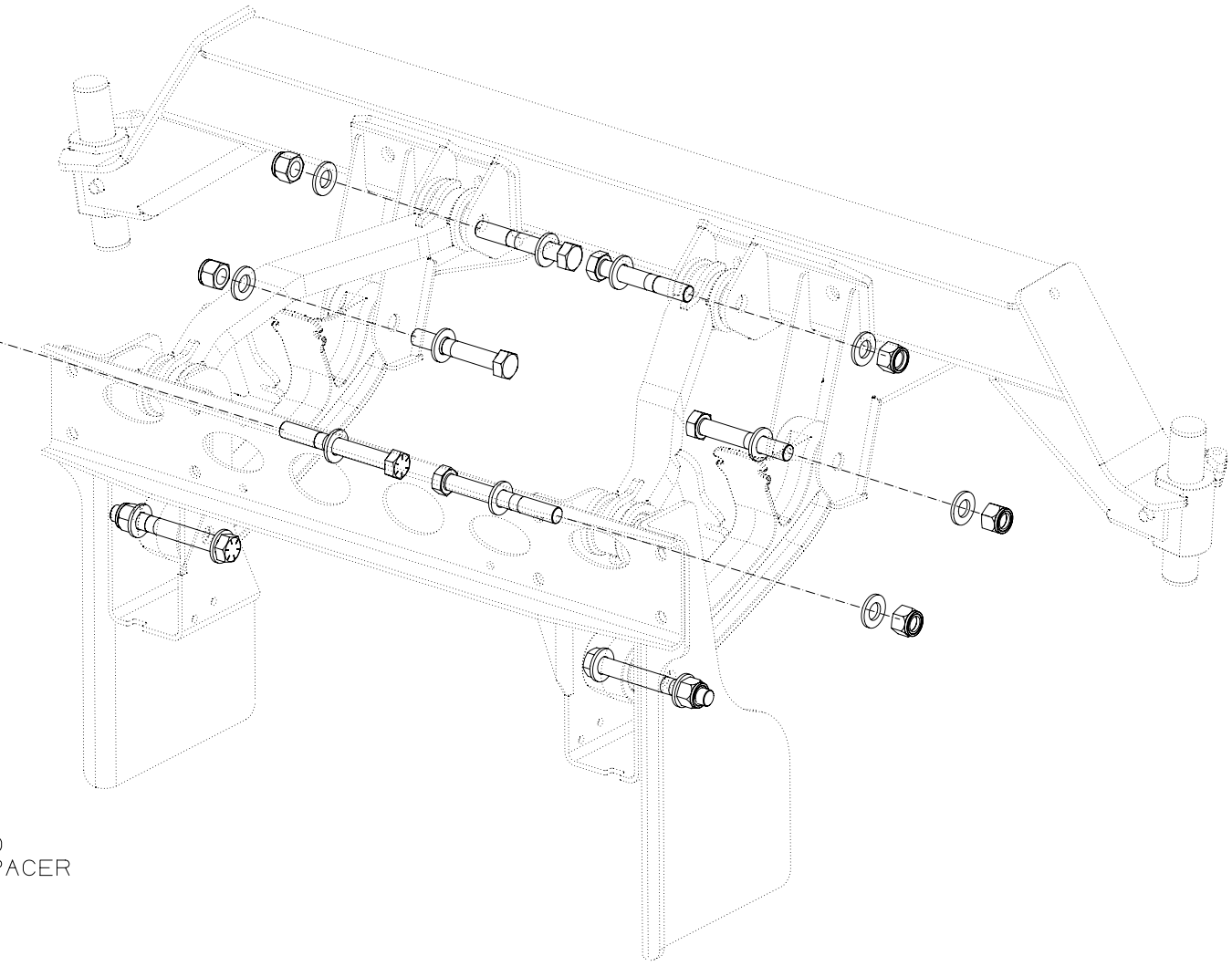

PACER

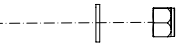

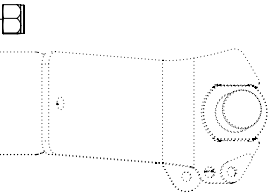

HENDRICKSON Auxiliary Axle Systems

PRODUCTION

Copyright © 2019 Hendrickson. All Rights Reserved

THIS PRINT REMAINS THE PROPERTY OF HENDRICKSON SUSPENSION SYSTEMS. ALL INFORMATION CONTAINED THEREON IS CONFIDENTIAL. IT IS LOANED, SUBJECT TO RETURN ON DEMAND, AND ON EXPRESS CONDITION THAT IT IS NOT TO BE COPIED OR USED DIRECTLY OR INDIRECTLY FOR ANY PURPOSE OTHER THAN THE PURPOSE FOR WHICH IT HAS BEEN LOANED TO YOU.

CAD — CAD FILE UPDATE ON CAD SYSTEM ONLY!

METRIC — UNLESS OTHERWISE NOTED, DIMENSIONS AND TOLERANCES ARE DEFINED IN MILLIMETERS IN ACCORDANCE WITH ASME STANDARD Y14.5M - 1994

DRAWN BY: S.KOHLER	DATE: 03-26-19	MAKE FROM: .	CUSTOMER: ALL
CHECKED BY: WESTNEDGE	DATE: 03-26-19	FOR MACHINING SEE: .	SUSPENSION TYPE: .
ENG. APPROVAL: WESTNEDGE	DATE: 03-26-19	FOR ASSEMBLY SEE: .	REF. LAYOUT: .
MFG. APPROVAL: .	DATE: .	REPLACES: .	REF. BOM: .
Q.C. APPROVAL: .	DATE: .	EQUIP.: .	ORIG. MFG. DWG.: .

DESCRIPTION: EXS13 ROLL-OFF PIVOT BOLTS INSTALL DWG, CENTERED

MODEL WEIGHT	PART/DWG NO.	SHEET NO.
143.5 LBS.	018122-0502	1 OF 1
SCALE 1:4		DWG. SIZE D

THIS DOCUMENT CONTAINS TECHNOLOGY SUBJECT TO THE U.S. EXPORT ADMINISTRATION REGULATIONS (15 CFR PARTS 730-774) OR U.S. INTERNATIONAL TRAFFIC IN ARMS REGULATIONS (22 CFR PARTS 121-130). PRIOR U.S. GOVERNMENT AUTHORIZATION IS REQUIRED TO RELEASE OR TRANSFER THIS TECHNOLOGY TO A FOREIGN PERSON EITHER IN THE UNITED STATES OR IN A FOREIGN COUNTRY.

INDEX

PAY CLOSE ATTENTION TO BOLT DIRECTION!

ITEM	PART NUMBER	
1	018122-0500	EXS1

FRAME WIDTH: 34.5"
BOLT TORQUE SPEC: HAES 9000-023

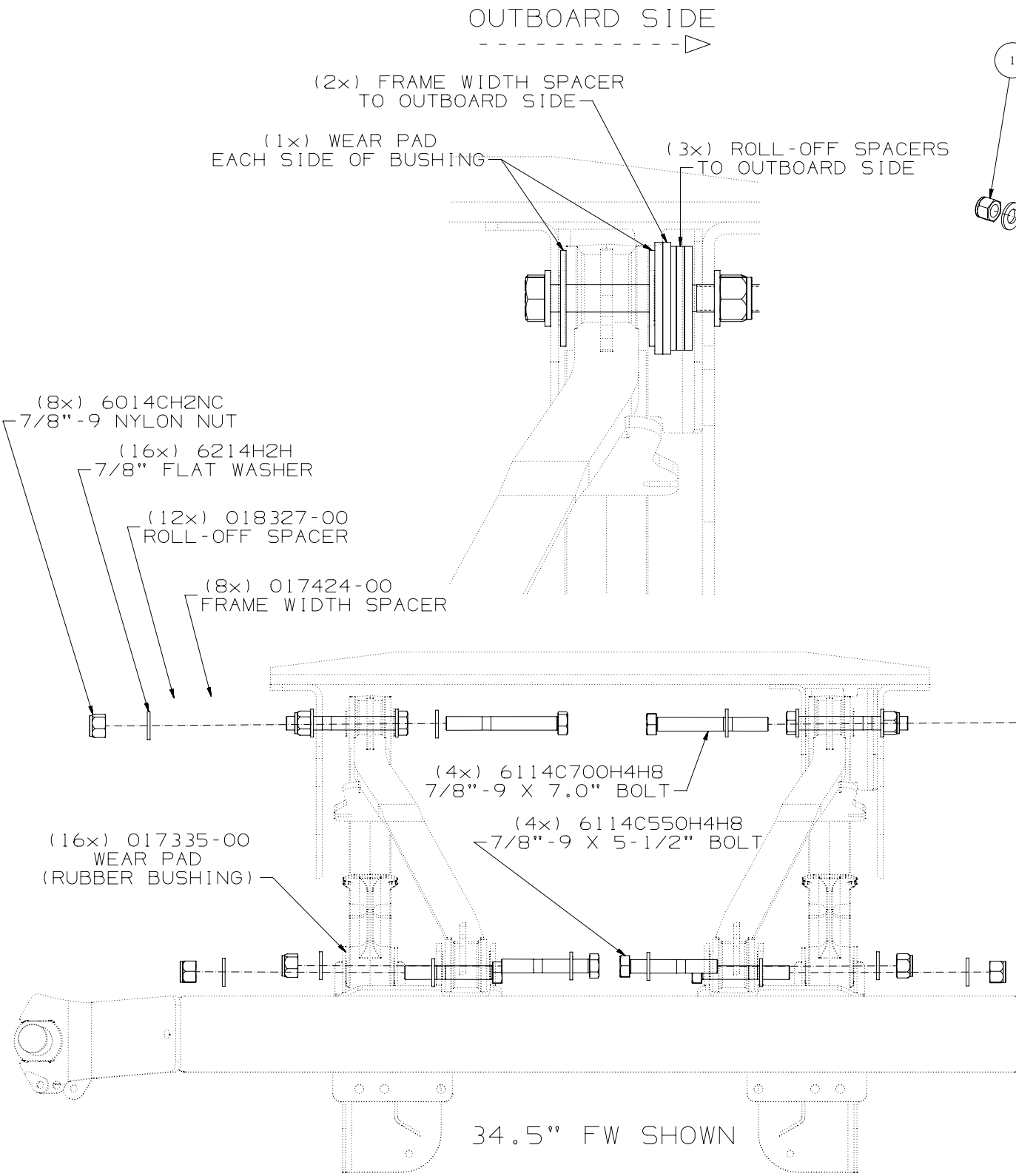

DESCRIPTION	QTY
3 ROLL-OFF PIVOT BOLT HARDWARE KIT	1

REV	ZONE	DESCRIPTION	BY / DATE	CHK / DATE	ENG / DATE	CN
A		RELEASED FOR PRODUCTION	SAK 03-26-19	A.W. 03-26-19	A.W. 03-26-19	19-0204

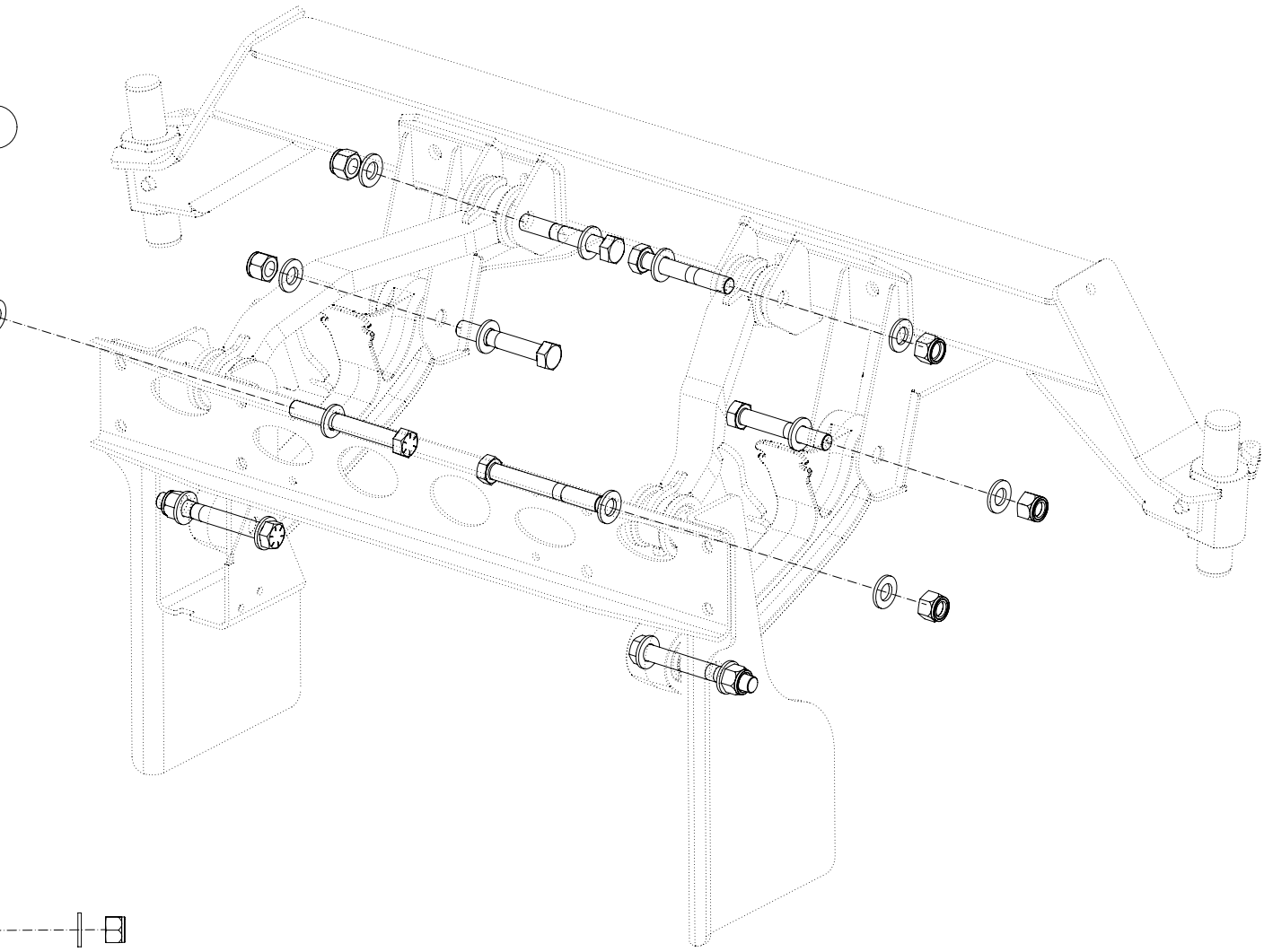

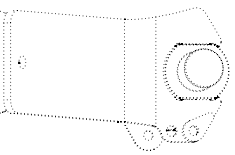

HENDRICKSON Auxiliary Axle Systems

PRODUCTION

Copyright © 2019 Hendrickson. All Rights Reserved

THIS PRINT REMAINS THE PROPERTY OF HENDRICKSON SUSPENSION SYSTEMS. ALL INFORMATION CONTAINED THEREON IS CONFIDENTIAL. IT IS LOANED, SUBJECT TO RETURN ON DEMAND, AND ON EXPRESS CONDITION THAT IT IS NOT TO BE COPIED OR USED DIRECTLY OR INDIRECTLY FOR ANY PURPOSE OTHER THAN THE PURPOSE FOR WHICH IT HAS BEEN LOANED TO YOU.

CAD — CAD FILE UPDATE ON CAD SYSTEM ONLY!

METRIC — UNLESS OTHERWISE NOTED, DIMENSIONS AND TOLERANCES ARE DEFINED IN MILLIMETERS IN ACCORDANCE WITH ASME STANDARD Y14.5M - 1994

DRAWN BY: S.KOHLER	DATE: 03-26-19	MAKE FROM: .	CUSTOMER: ALL
CHECKED BY: WESTNEDGE	DATE: 03-26-19	FOR MACHINING SEE: .	SUSPENSION TYPE: .
ENG. APPROVAL: WESTNEDGE	DATE: 03-26-19	FOR ASSEMBLY SEE: .	REF. LAYOUT: .
MFG. APPROVAL: .	DATE: .	REPLACES: .	REF. BOM: .
Q.C. APPROVAL: .	DATE: .	EQUIP.: .	ORIG. MFG. DWG.: .

DESCRIPTION

EXS13 ROLL-OFF
PIVOT BOLTS INSTALL DWG, WIDE

MODEL WEIGHT	PART/DWG NO.	SHEET NO.
143.5 LBS.	018122-0503	1 OF 1
SCALE 1:4		DWG. SIZE D

THIS DOCUMENT CONTAINS TECHNOLOGY SUBJECT TO THE U.S. EXPORT ADMINISTRATION REGULATIONS (15 CFR PARTS 730-774) OR U.S. INTERNATIONAL TRAFFIC IN ARMS REGULATIONS (22 CFR PARTS 121-130). PRIOR U.S. GOVERNMENT AUTHORIZATION IS REQUIRED TO RELEASE OR TRANSFER THIS TECHNOLOGY TO A FOREIGN PERSON EITHER IN THE UNITED STATES OR IN A FOREIGN COUNTRY.

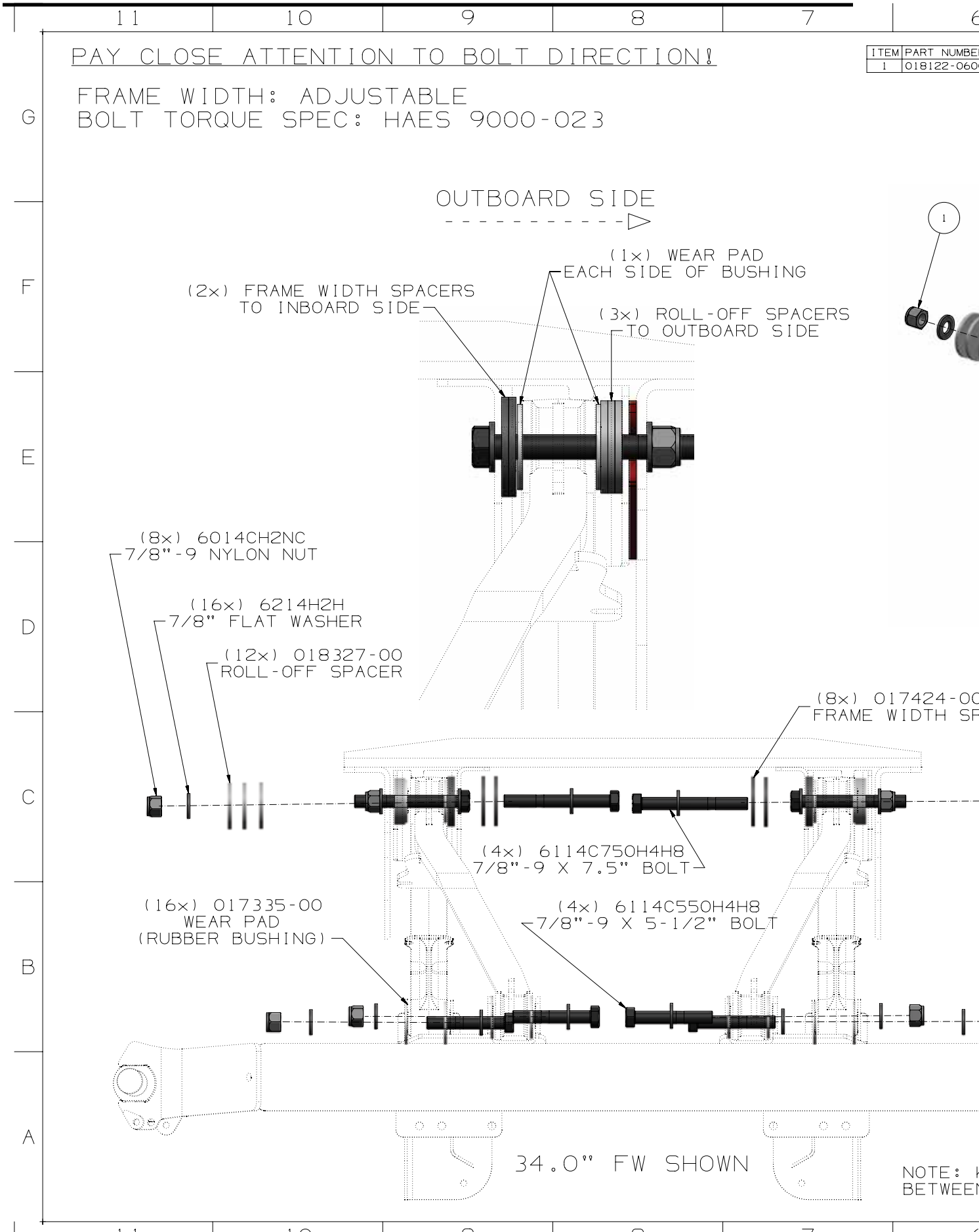
PAY CLOSE ATTENTION TO BOLT DIRECTION!
FRAME WIDTH: ADJUSTABLE
BOLT TORQUE SPEC: HAES 9000-023
OUTBOARD SIDE
(1x) WEAR PAD
EACH SIDE OF BUSHING
(2x) FRAME WIDTH SPACERS
TO INBOARD SIDE
(3x) ROLL-OFF SPACERS
TO OUTBOARD SIDE
(8x) 6014CH2NC
7/8"-9 NYLON NUT
(16x) 6214H2H
7/8" FLAT WASHER
(12x) 018327-00
ROLL-OFF SPACER
(8x) 017424-00
FRAME WIDTH SP
(4x) 6114C750H4H8
7/8"-9 X 7.5" BOLT
(16x) 017335-00
WEAR PAD
(RUBBER BUSHING)
(4x) 6114C550H4H8
7/8"-9 X 5-1/2" BOLT
34.0" FW SHOWN
NOTE: K
BETWEEN
ITEM
PART NUMBE
1
018122-060

R	DESCRIPTION	QTY
0	EXS13 ROLL-OFF ADJ. PIVOT BOLT HARDWARE KIT	1

REV	ZONE	DESCRIPTION	BY / DATE	CHK / DATE	ENG / DATE	CN
A		RELEASED FOR PRODUCTION	SAK 03-28-19	A.W 03-28-19	A.W 03-28-19	19-0 204

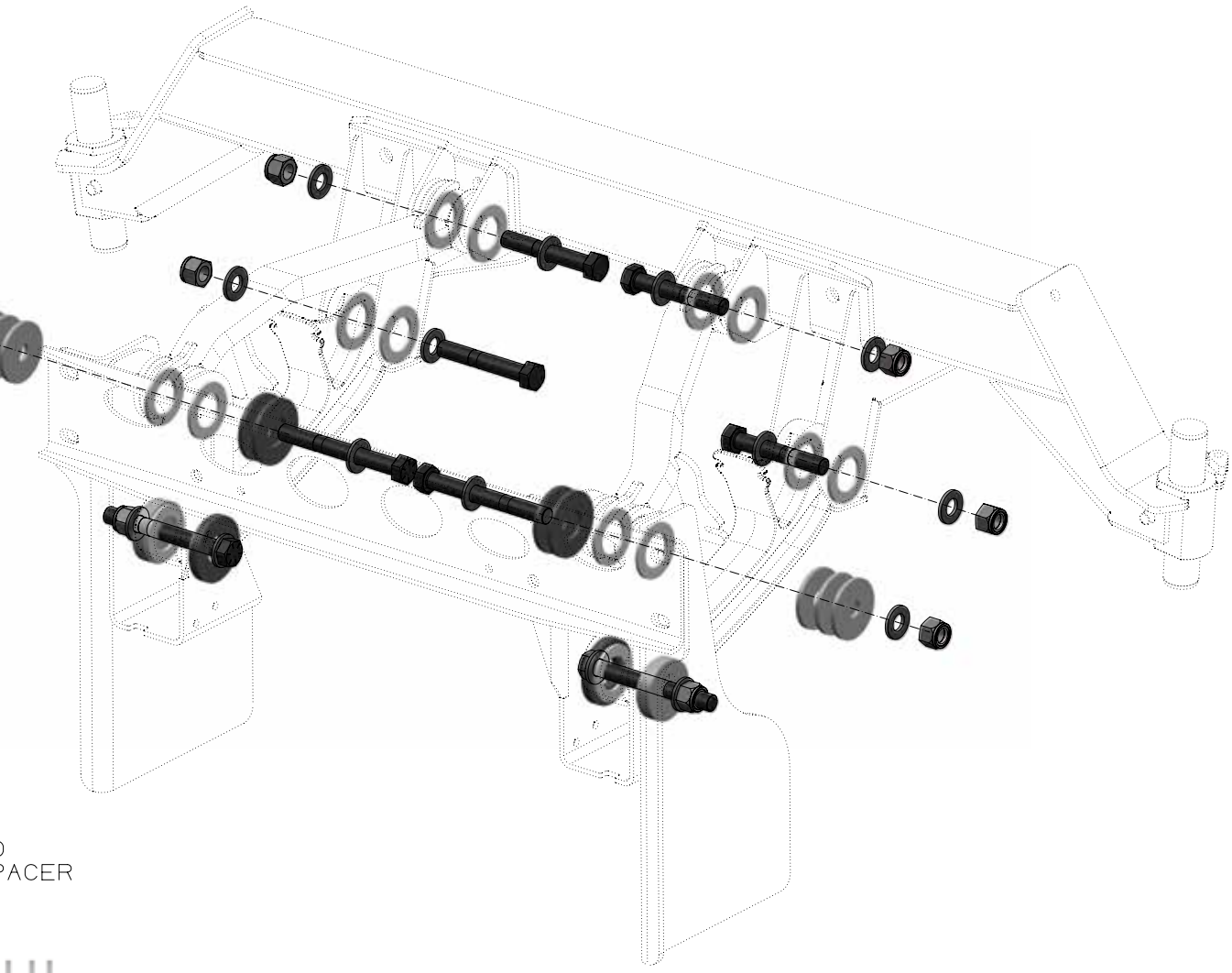

PACER

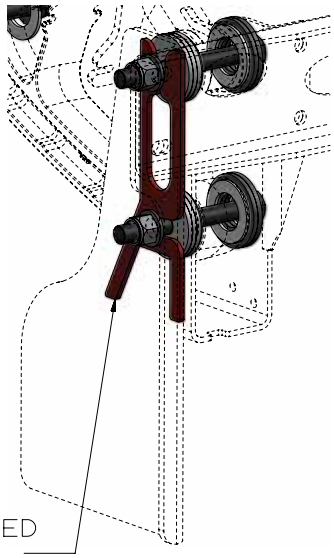

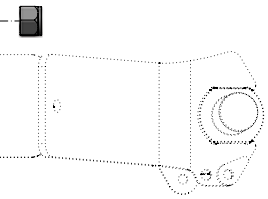

K-SPACERS (008299) TO BE LOCATED
N THE SADDLE AND THE SIDE RAIL

HENDRICKSON
Auxiliary Axle Systems

PRODUCTION

Copyright © 2019 Hendrickson. All Rights Reserved

THIS PRINT REMAINS THE PROPERTY OF HENDRICKSON SUSPENSION SYSTEMS. ALL INFORMATION CONTAINED THEREON IS CONFIDENTIAL. IT IS LOANED, SUBJECT TO RETURN ON DEMAND, AND ON EXPRESS CONDITION THAT IT IS NOT TO BE COPIED OR USED DIRECTLY OR INDIRECTLY FOR ANY PURPOSE OTHER THAN THE PURPOSE FOR WHICH IT HAS BEEN LOANED TO YOU.

CAD — CAD FILE UPDATE ON CAD SYSTEM ONLY!

METRIC — UNLESS OTHERWISE NOTED, DIMENSIONS AND TOLERANCES ARE DEFINED IN MILLIMETERS IN ACCORDANCE WITH ASME STANDARD Y14.5M - 1994

DRAWN BY S.KOHLER	DATE 03-28-19	MAKE FROM .	CUSTOMER ALL
CHECKED BY WESTNEDGE	DATE 03-28-19	FOR MACHINING SEE .	SUSPENSION TYPE .
ENG. APPROVAL WESTNEDGE	DATE 03-28-19	FOR ASSEMBLY SEE .	REF. LAYOUT .
MFG. APPROVAL .	DATE .	REPLACES .	REF. BOM .
Q.C. APPROVAL .	DATE .	EQUIP. .	ORIG. MFG. DWG. .

DESCRIPTION: EXS13 ROLL-OFF ADJUSTABLE PIVOT BOLTS INSTALL DWG

MODEL WEIGHT	PART/DWG NO.	SHEET NO.
143.5 LBS.	018122-0601	1 OF 1
SCALE 1:4		DWG. SIZE D

THIS DOCUMENT CONTAINS TECHNOLOGY SUBJECT TO THE U.S. EXPORT ADMINISTRATION REGULATIONS (15 CFR PARTS 730-774) OR U.S. INTERNATIONAL TRAFFIC IN ARMS REGULATIONS (22 CFR PARTS 121-130). PRIOR U.S. GOVERNMENT AUTHORIZATION IS REQUIRED TO RELEASE OR TRANSFER THIS TECHNOLOGY TO A FOREIGN PERSON EITHER IN THE UNITED STATES OR IN A FOREIGN COUNTRY.

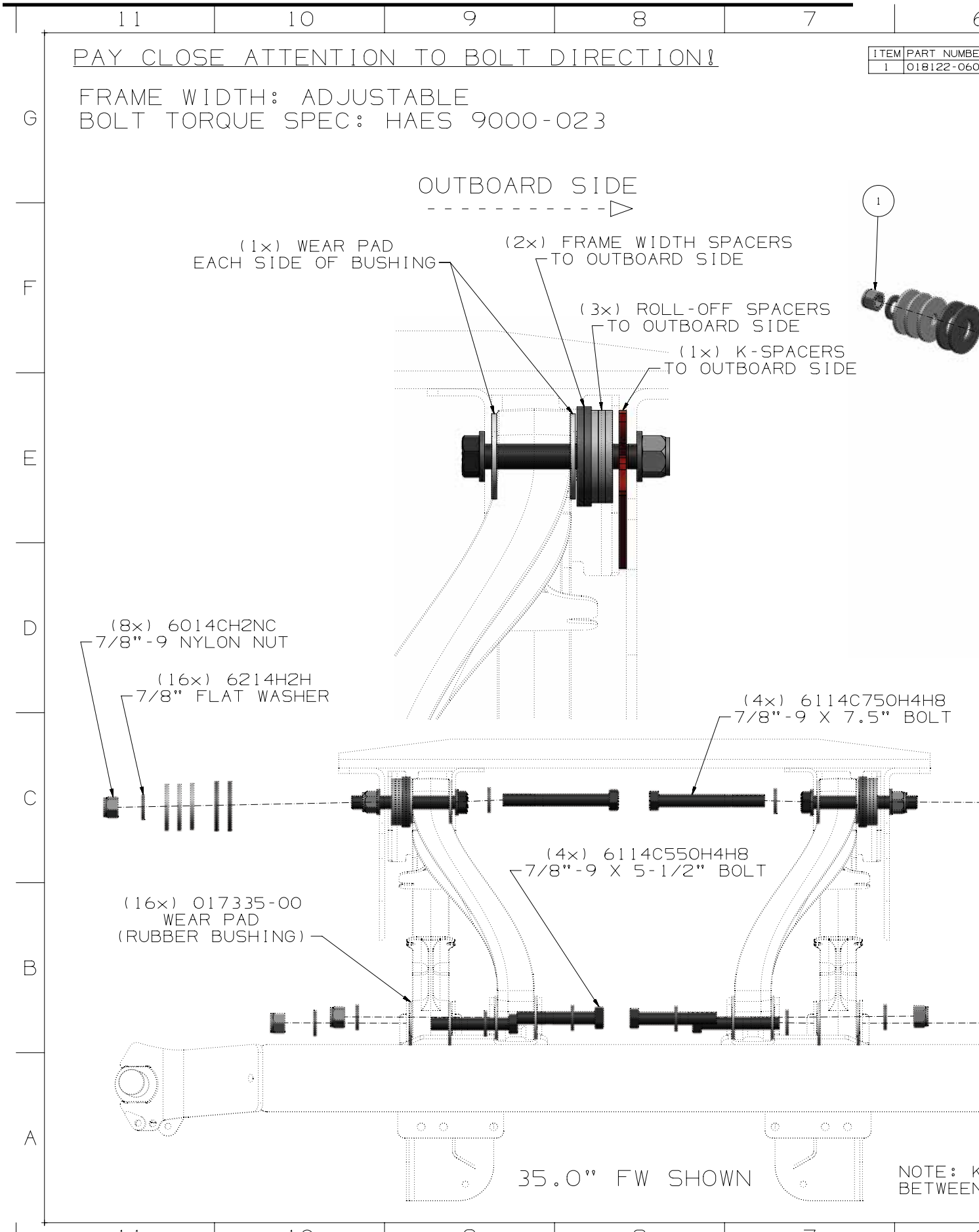
PAY CLOSE ATTENTION TO BOLT DIRECTION!
ITEM PART NUMBE
1 018122-060
FRAME WIDTH: ADJUSTABLE
BOLT TORQUE SPEC: HAES 9000-023
OUTBOARD SIDE
(1x) WEAR PAD
EACH SIDE OF BUSHING
(2x) FRAME WIDTH SPACERS
TO OUTBOARD SIDE
(3x) ROLL-OFF SPACERS
TO OUTBOARD SIDE
(1x) K-SPACERS
TO OUTBOARD SIDE
(8x) 6014CH2NC
7/8"-9 NYLON NUT
(16x) 6214H2H
7/8" FLAT WASHER
(4x) 6114C750H4H8
7/8"-9 X 7.5" BOLT
(4x) 6114C550H4H8
7/8"-9 X 5-1/2" BOLT
(16x) 017335-00
WEAR PAD
(RUBBER BUSHING)
35.0" FW SHOWN
NOTE: K
BETWEEN

R	DESCRIPTION	QTY
0	EXS13 ROLL-OFF ADJ. PIVOT BOLT HARDWARE KIT	1

REV	ZONE	DESCRIPTION	BY / DATE	CHK / DATE	ENG / DATE	CN
A		RELEASED FOR PRODUCTION	SAK 07-22-20	JHS 07-22-20	AP 07-22-20	20-0 470

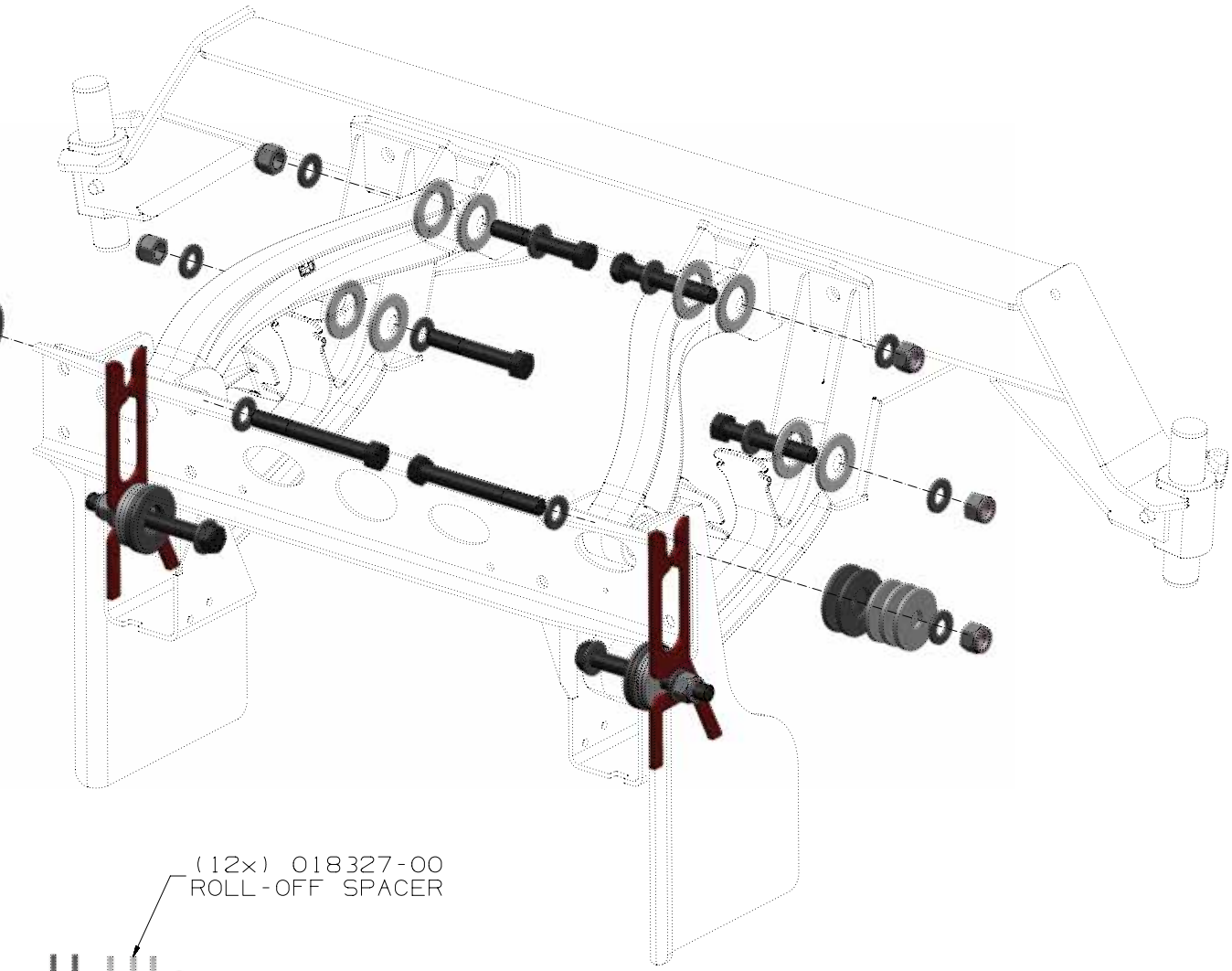

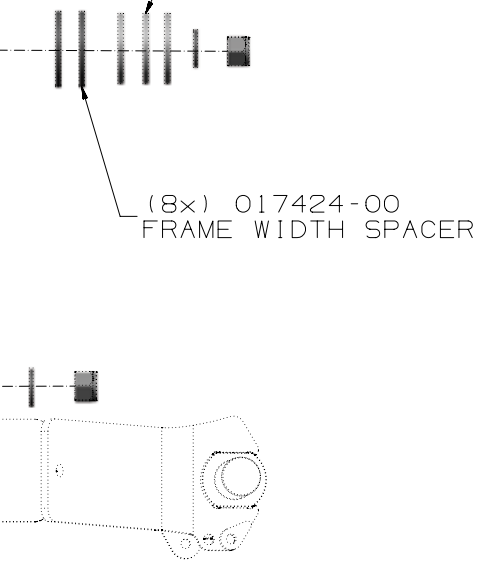

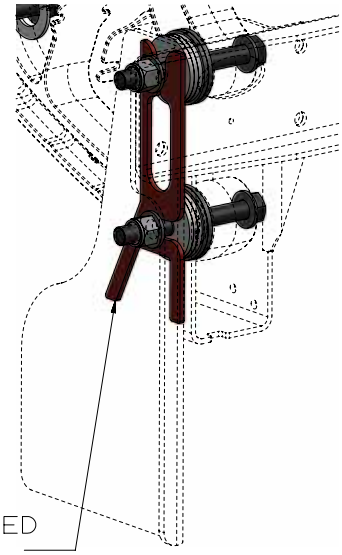

K-SPACERS (008299) TO BE LOCATED
N THE SADDLE AND THE SIDE RAIL

HENDRICKSON
Auxiliary Axle Systems

PRODUCTION

Copyright © 2020 Hendrickson. All Rights Reserved.

THIS PRINT REMAINS THE PROPERTY OF HENDRICKSON SUSPENSION SYSTEMS. ALL INFORMATION CONTAINED THEREON IS CONFIDENTIAL. IT IS LOANED, SUBJECT TO RETURN ON DEMAND, AND ON EXPRESS CONDITION THAT IT IS NOT TO BE COPIED OR USED DIRECTLY OR INDIRECTLY FOR ANY PURPOSE OTHER THAN THE PURPOSE FOR WHICH IT HAS BEEN LOANED TO YOU.

CAD — CAD FILE UPDATE ON CAD SYSTEM ONLY!

METRIC — UNLESS OTHERWISE NOTED, DIMENSIONS AND TOLERANCES ARE DEFINED IN MILLIMETERS IN ACCORDANCE WITH ASME STANDARD Y14.5M - 1994

DRAWN BY	DATE	MAKE FROM	CUSTOMER
S.KOHLER	03-28-19	.	ALL
CHECKED BY	DATE	FOR MACHINING SEE	SUSPENSION TYPE
WESTNEDGE	03-28-19	.	.
ENG. APPROVAL	DATE	FOR ASSEMBLY SEE	REF. LAYOUT
WESTNEDGE	03-28-19	.	.
MFG. APPROVAL	DATE	REPLACES	REF. BOM
.	.	.	.
Q.C. APPROVAL	DATE	EQUIP.	ORIG. MFG. DWG.
.	.	.	.

DESCRIPTION

EXS13 ROLL-OFF 35.0" FW
PIVOT BOLTS INSTALL DWG

MODEL WEIGHT	PART/DWG NO.	SHEET NO.
143.5 LBS.	018122-0603	1 OF 1
SCALE 1:4		DWG. SIZE D

THIS DOCUMENT CONTAINS TECHNOLOGY SUBJECT TO THE U.S. EXPORT ADMINISTRATION REGULATIONS (15 CFR PARTS 730-774) OR U.S. INTERNATIONAL TRAFFIC IN ARMS REGULATIONS (22 CFR PARTS 121-130). PRIOR U.S. GOVERNMENT AUTHORIZATION IS REQUIRED TO RELEASE OR TRANSFER THIS TECHNOLOGY TO A FOREIGN PERSON EITHER IN THE UNITED STATES OR IN A FOREIGN COUNTRY.

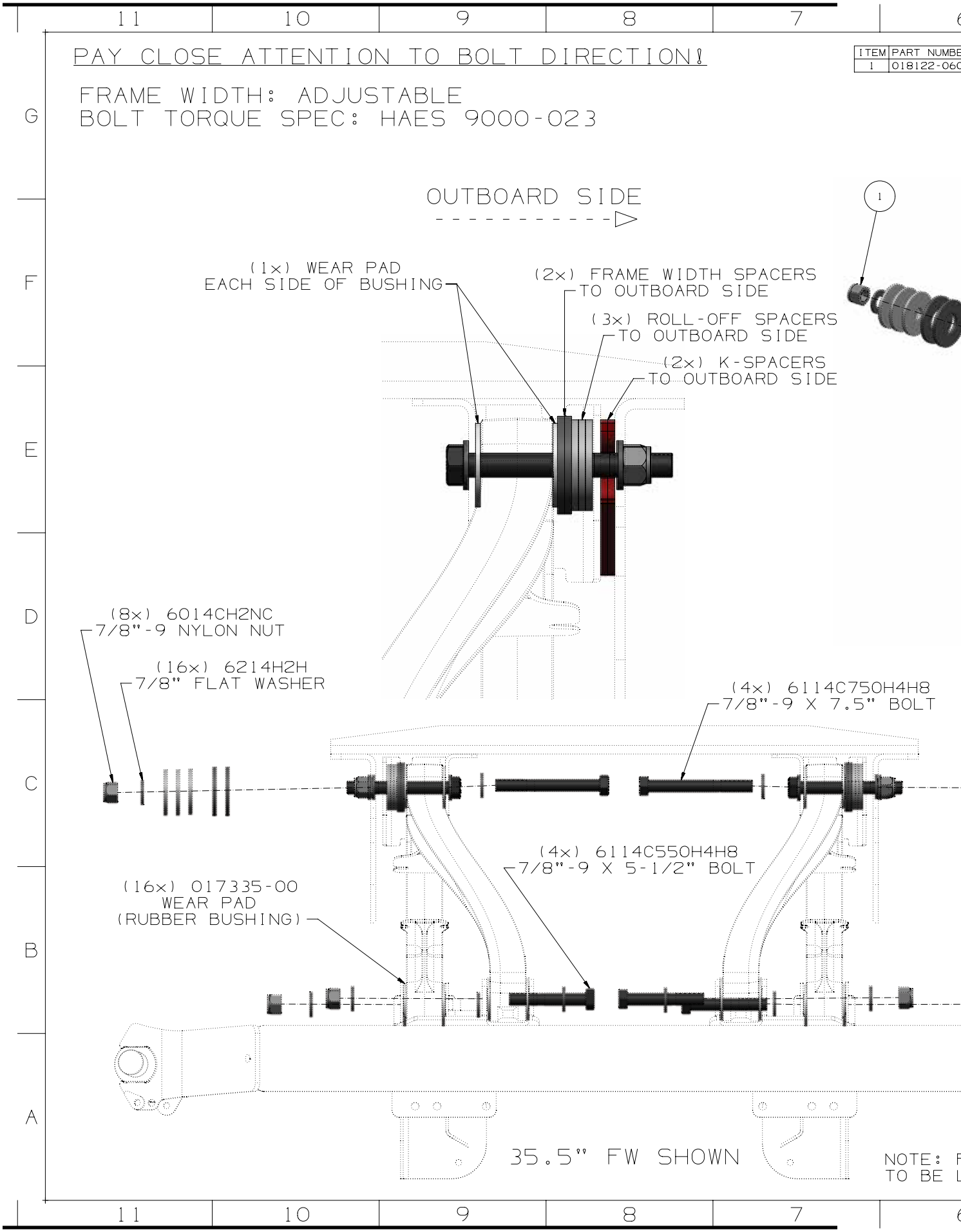
PAY CLOSE ATTENTION TO BOLT DIRECTION!
FRAME WIDTH: ADJUSTABLE
BOLT TORQUE SPEC: HAES 9000-023
ITEM
PART NUMBE
1
018122-060
OUTBOARD SIDE
(1x) WEAR PAD
EACH SIDE OF BUSHING
(2x) FRAME WIDTH SPACERS
TO OUTBOARD SIDE
(3x) ROLL-OFF SPACERS
TO OUTBOARD SIDE
(2x) K-SPACERS
TO OUTBOARD SIDE
(8x) 6014CH2NC
7/8"-9 NYLON NUT
(16x) 6214H2H
7/8" FLAT WASHER
(4x) 6114C750H4H8
7/8"-9 X 7.5" BOLT
(4x) 6114C550H4H8
7/8"-9 X 5-1/2" BOLT
(16x) 017335-00
WEAR PAD
(RUBBER BUSHING)
35.5" FW SHOWN
NOTE:
TO BE

ER	DESCRIPTION	QTY
00	EXS13 ROLL-OFF ADJ. PIVOT BOLT HARDWARE KIT	1

REV	ZONE	DESCRIPTION	BY / DATE	CHK / DATE	ENG / DATE	CN
A		RELEASED FOR PRODUCTION	SAK 07-22-20	JHS 07-22-20	AP 07-22-20	20-0 470

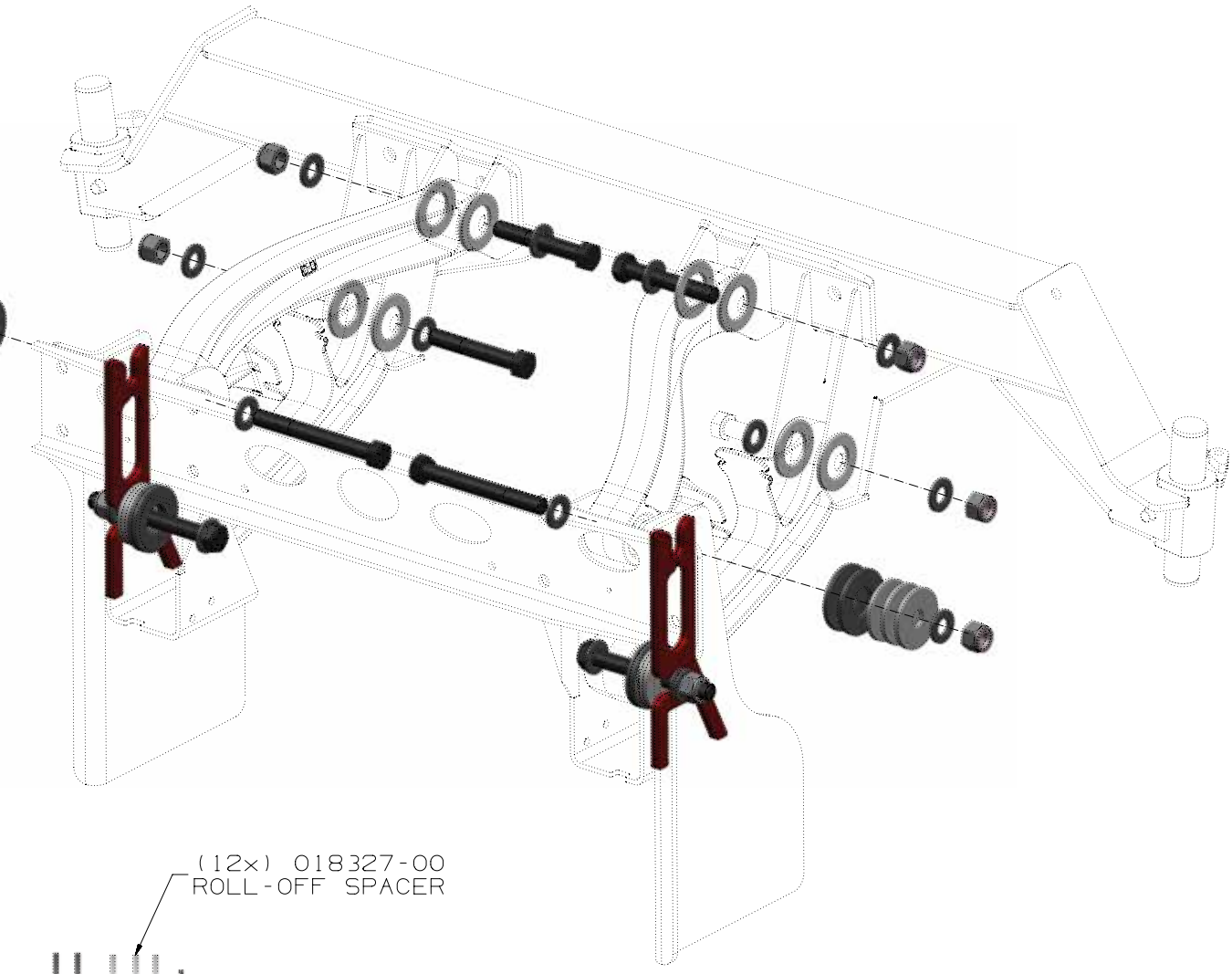

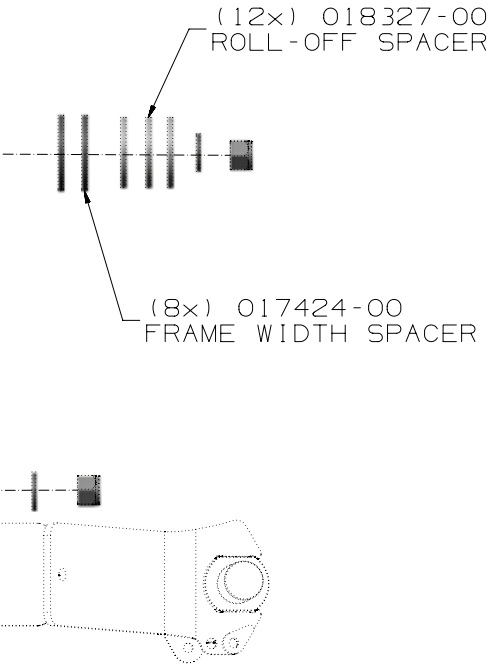

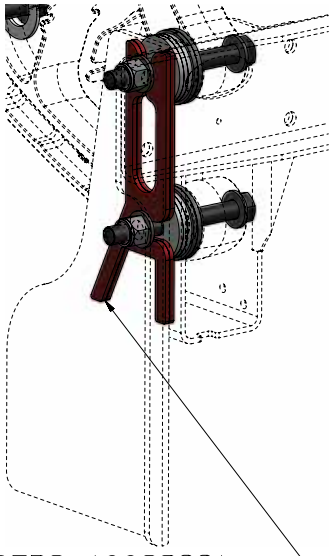

FOR THIS APPLICATION (2) K-SPACERS (008299)
LOCATED BETWEEN THE SADDLE AND THE SIDE RAIL

HENDRICKSON Auxiliary Axle Systems

PRODUCTION

Copyright © 2020 Hendrickson, All Rights Reserved.

THIS PRINT REMAINS THE PROPERTY OF HENDRICKSON SUSPENSION SYSTEMS. ALL INFORMATION CONTAINED THEREON IS CONFIDENTIAL. IT IS LOANED, SUBJECT TO RETURN ON DEMAND, AND ON EXPRESS CONDITION THAT IT IS NOT TO BE COPIED OR USED DIRECTLY OR INDIRECTLY FOR ANY PURPOSE OTHER THAN THE PURPOSE FOR WHICH IT HAS BEEN LOANED TO YOU.

CAD — CAD FILE UPDATE ON CAD SYSTEM ONLY!

METRIC — UNLESS OTHERWISE NOTED, DIMENSIONS AND TOLERANCES ARE DEFINED IN MILLIMETERS IN ACCORDANCE WITH ASME STANDARD Y14.5M - 1994

DRAWN BY S.KOHLER	DATE 03-28-19	MAKE FROM .	CUSTOMER ALL
CHECKED BY WESTNEDGE	DATE 03-28-19	FOR MACHINING SEE .	SUSPENSION TYPE .
ENG. APPROVAL WESTNEDGE	DATE 03-28-19	FOR ASSEMBLY SEE .	REF. LAYOUT .
MFG. APPROVAL .	DATE .	REPLACES .	REF. BOM .
Q.C. APPROVAL .	DATE .	EQUIP. .	ORIG. MFG. DWG. .

DESCRIPTION

EXS13 ROLL-OFF 35.5" FW
PIVOT BOLTS INSTALL DWG

MODEL WEIGHT	PART/DWG NO.	SHEET NO.
143.5 LBS.	018122-0604	1 OF 1
SCALE 1:4		DWG. SIZE D

THIS DOCUMENT CONTAINS TECHNOLOGY SUBJECT TO THE U.S. EXPORT ADMINISTRATION REGULATIONS (15 CFR PARTS 730-774) OR U.S. INTERNATIONAL TRAFFIC IN ARMS REGULATIONS (22 CFR PARTS 121-130). PRIOR U.S. GOVERNMENT AUTHORIZATION IS REQUIRED TO RELEASE OR TRANSFER THIS TECHNOLOGY TO A FOREIGN PERSON EITHER IN THE UNITED STATES OR IN A FOREIGN COUNTRY.

NOTES:
1. BOLT TORQUE SPEC: HAES 9000-023
2. SHORTER INNER METALS GO ON AXLE SIDE.
3. THE 6114C550H4H8 BOLTS ARE ALWAYS ON AXLE SIDE.

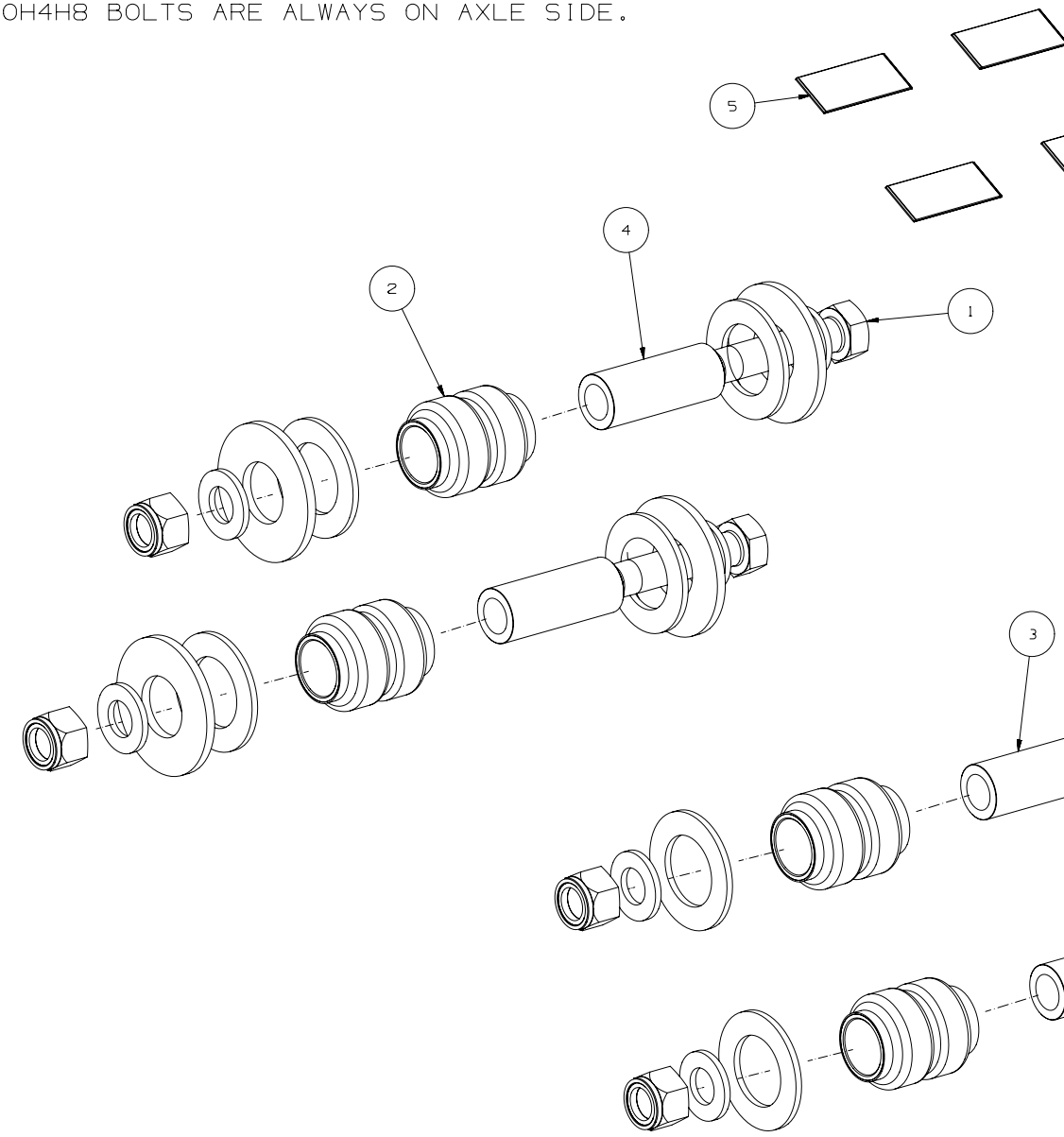

ITEM	DESCRIPTION	PART NUMBER R-020126-0100	PART NUMBER R-020126-0400	PART NUMBER R-020126-0500	PART NUMBER R-020126-0600
1	PIVOT BOLT KIT	018122-0100	018122-0400	018122-0500	018122-0600
2	RUBBER BUSHING 2.41" OD X 1.416" ID X 2.98"L, EX13	017336-01	017336-01	017336-01	017336-01
3	DOM TUBE 1.396" OD X.905" ID X 3.003"L, EX13	017336-02	017336-02	017336-02	017336-02
4	DOM TUBE 1.396" OD X.905" ID X 3.500"L, EX13	017336-03	017336-03	017336-03	017336-03
5	LUBE PACK	A-14011	A-14011	A-14011	A-14011
	SEE PIVOT BOLT INSTALLATION DRAWINGS				
	NARROW ALIGNMENT (ALL NUTS OUT)	018122-0110	NA	NA	NA
	CENTERED ALIGNMENT (ALL NUTS OUT)	018122-0111	NA	NA	NA
	WIDE ALIGNMENT (ALL NUTS OUT)	018122-0112	NA	NA	NA
	TRUCK ADJUSTABLE (ALL NUTS OUT)	NA	018122-0401	NA	NA
	TRUCK 35.0 IN. FRAME WIDTH (ALL NUTS OUT)	NA	018122-0402	NA	NA
	TRUCK 35.5 IN. FRAME WIDTH (ALL NUTS OUT)	NA	018122-0403	NA	NA
	ROLL-OFF NARROW ALIGNMENT (ALL NUTS OUT)	NA	NA	018122-0501	NA
	ROLL-OFF CENTERED ALIGNMENT (ALL NUTS OUT)	NA	NA	018122-0502	NA
	ROLL-OFF WIDE ALIGNMENT (ALL NUTS OUT)	NA	NA	018122-0503	NA
	ROLL-OFF ADJUSTABLE (ALL NUTS OUT)	NA	NA	NA	018122-0601
	ROLL-OFF 35.0 IN. FRAME WIDTH (ALL NUTS OUT)	NA	NA	NA	018122-0603
	ROLL-OFF 35.5 IN. FRAME WIDTH (ALL NUTS OUT)	NA	NA	NA	018122-0604

REV	ZONE	DESCRIPTION	BY / DATE	CHK / DATE	ENG / DATE	CN
A		RELEASED FOR PRODUCTION	SAK 08-27-21	JHS 08-27-21	AP 08-27-21	21-0575

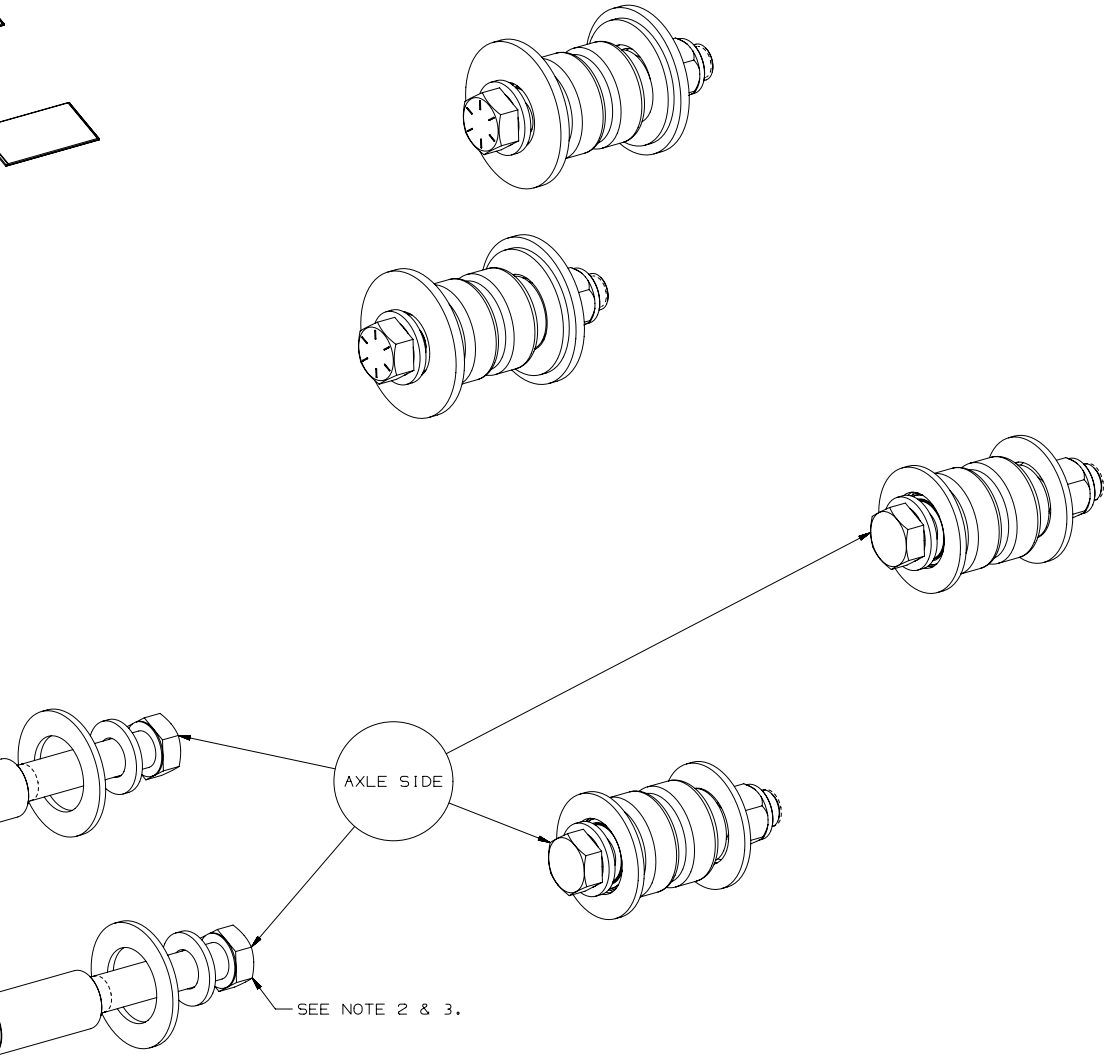

QTY.	
1	SERIES EXS8, 10 & 13
8	
4	
4	
4	
PIVOT BOLT INSTALLATION DRAWINGS	

HENDRICKSON Auxiliary Axle Systems

PRODUCTION

Copyright © 2021 Hendrickson, All Rights Reserved.

THIS PRINT REMAINS THE PROPERTY OF HENDRICKSON SUSPENSION SYSTEMS. ALL INFORMATION CONTAINED THEREON IS CONFIDENTIAL. IT IS LOANED, SUBJECT TO RETURN ON DEMAND, AND ON EXPRESS CONDITION THAT IT IS NOT TO BE COPIED OR USED DIRECTLY OR INDIRECTLY FOR ANY PURPOSE OTHER THAN THE PURPOSE FOR WHICH IT HAS BEEN LOANED TO YOU.

CAD — CAD FILE UPDATE ON CAD SYSTEM ONLY!

METRIC — UNLESS OTHERWISE NOTED, DIMENSIONS AND TOLERANCES ARE DEFINED IN MILLIMETERS IN ACCORDANCE WITH ASME STANDARD Y14.5M - 1994

DRAWN BY S.KOHLER	DATE 08-27-21	MAKE FROM .	CUSTOMER ALL
CHECKED BY SLONAKER	DATE 08-27-21	FOR MACHINING SEE .	SUSPENSION TYPE .
ENG. APPROVAL A.POWER	DATE 08-27-21	FOR ASSEMBLY SEE .	REF. LAYOUT .
MFG. APPROVAL .	DATE .	REPLACES .	REF. BOM .
Q.C. APPROVAL .	DATE .	EQUIP. .	ORIG. MFG. DWG. .

DESCRIPTION

EXS08, 10 & 13 PIVOT BOLT/BUSHING R-PART KIT MASTER CHARTED DWG.

MODEL WEIGHT	PART/DWG NO.	SHEET NO.
18.0 LBS.	020126-0000	1 OF 1
SCALE 1:1		DWG. SIZE D

THIS DOCUMENT CONTAINS TECHNOLOGY SUBJECT TO THE U.S. EXPORT ADMINISTRATION REGULATIONS (15 CFR PARTS 730-774) OR U.S. INTERNATIONAL TRAFFIC IN ARMS REGULATIONS (22 CFR PARTS 121-130). PRIOR U.S. GOVERNMENT AUTHORIZATION IS REQUIRED TO RELEASE OR TRANSFER THIS TECHNOLOGY TO A FOREIGN PERSON EITHER IN THE UNITED STATES OR IN A FOREIGN COUNTRY.

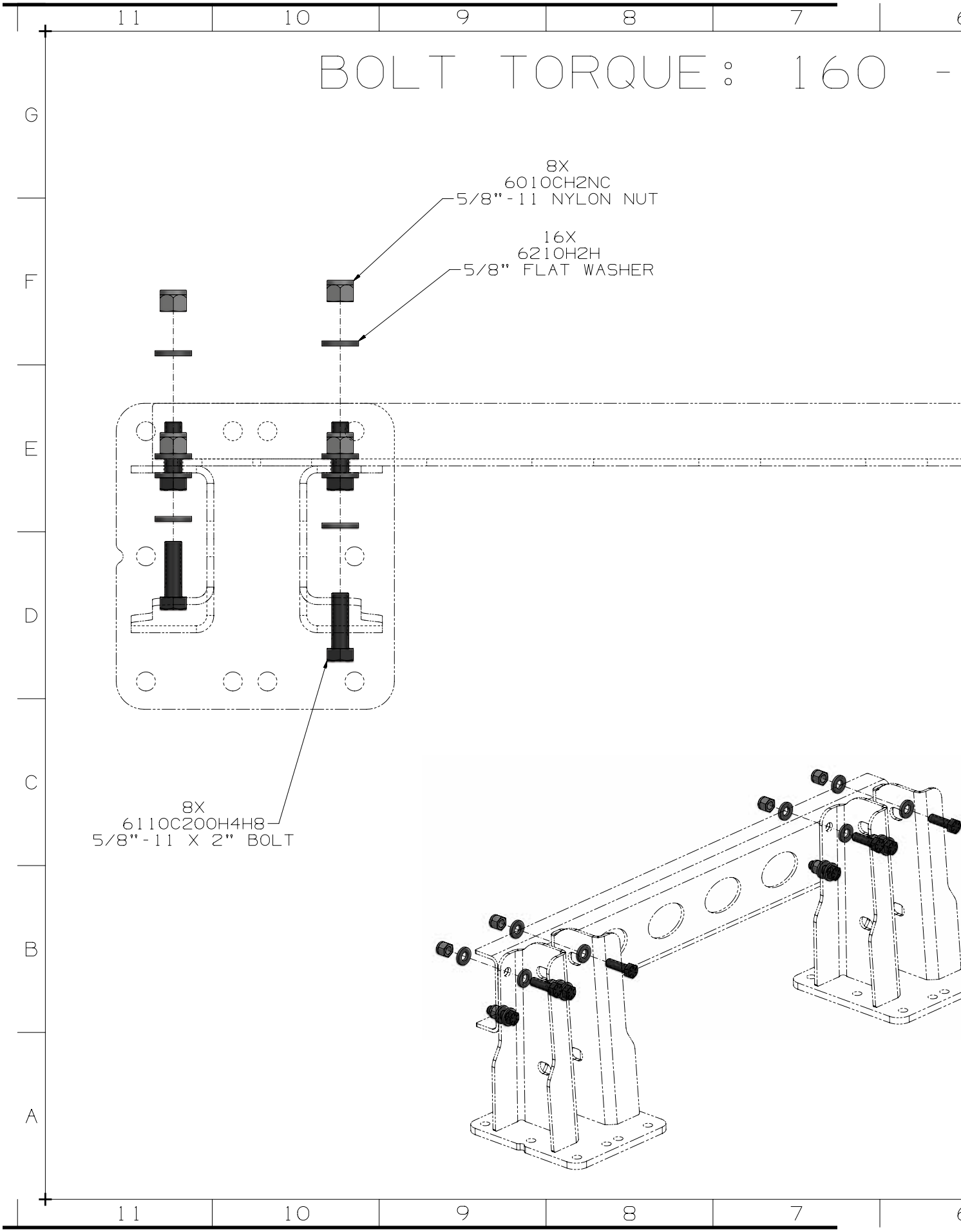
BOLT TORQUE: 160 -
8X
6010CH2NC
5/8"-11 NYLON NUT
16X
6210H2H
5/8" FLAT WASHER
8X
6110C200H4H8
5/8"-11 X 2" BOLT

180 ft-lb

REV	ZONE	DESCRIPTION	BY / DATE	CHK / DATE	ENG / DATE	CN
A		RELEASED FOR PRODUCTION	JAB 04-16-18	MJM 04-16-18	AJW 04-16-18	18-0387
B		FIXED POKE-YOKE ARRANGEMENT	MJM 05-22-19	A.W 05-22-19	A.W 05-22-19	18-0808
C		ADDED WEIGHT, UPDATE TITLE	JAG 02-19-21	JHS 02-19-21	JAG 02-19-21	21-0149

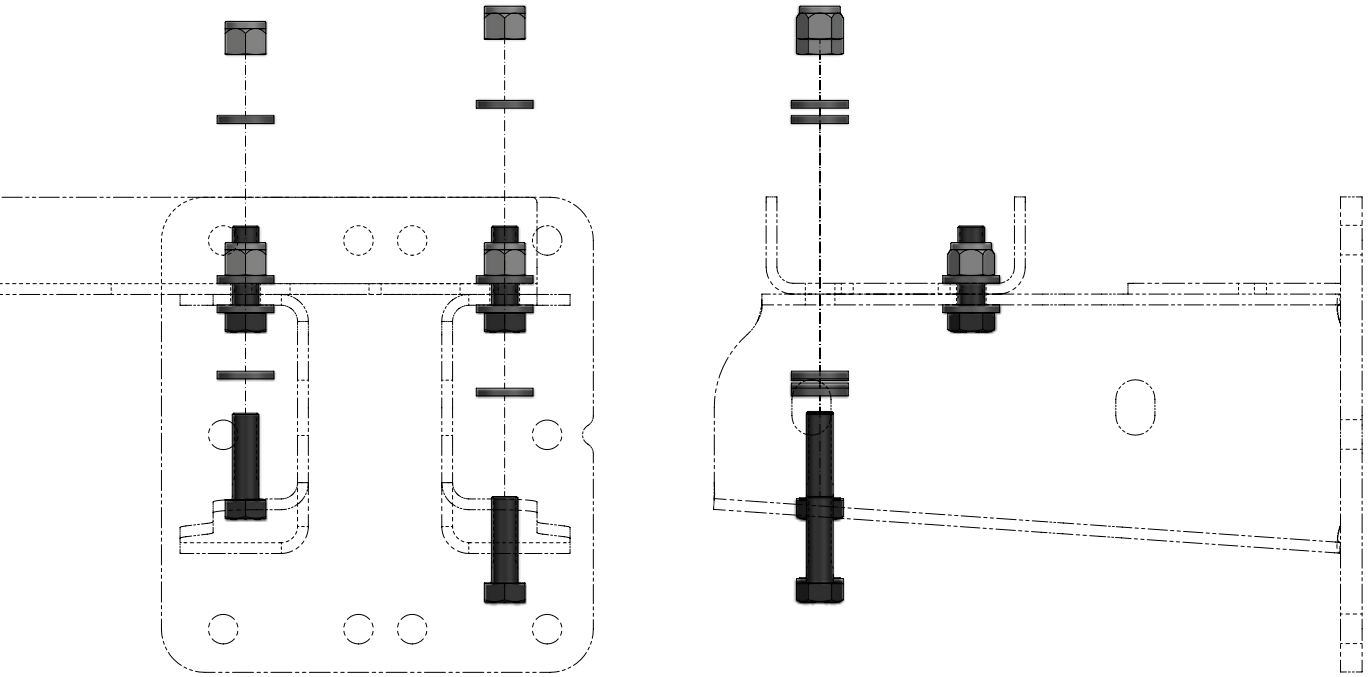

HENDRICKSON Auxiliary Axle Systems

PRODUCTION

Copyright © 2021 Hendrickson, All Rights Reserved.

THIS PRINT REMAINS THE PROPERTY OF HENDRICKSON SUSPENSION SYSTEMS. ALL INFORMATION CONTAINED THEREON IS CONFIDENTIAL. IT IS LOANED, SUBJECT TO RETURN ON DEMAND, AND ON EXPRESS CONDITION THAT IT IS NOT TO BE COPIED OR USED DIRECTLY OR INDIRECTLY FOR ANY PURPOSE OTHER THAN THE PURPOSE FOR WHICH IT HAS BEEN LOANED TO YOU.

CAD — CAD FILE UPDATE ON CAD SYSTEM ONLY!

METRIC — UNLESS OTHERWISE NOTED, DIMENSIONS AND TOLERANCES ARE DEFINED IN MILLIMETERS IN ACCORDANCE WITH ASME STANDARD Y14.5M - 1994

	DATE		
DRAWN BY J.BIRO	04-16-18	MAKE FROM .	CUSTOMER ALL
CHECKED BY McCARTHY	04-16-18	FOR MACHINING SEE .	SUSPENSION TYPE .
ENG. APPROVAL WESTNEDGE	04-16-18	FOR ASSEMBLY SEE .	REF. LAYOUT .
MFG. APPROVAL .	DATE .	REPLACES .	REF. BOM .
Q.C. APPROVAL .	DATE .	EQUIP. .	ORIG. MFG. DWG. .

DESCRIPTION

EX13 BOLT-ON CROSSMEMBER HARDWARE KIT

MODEL WEIGHT	PART/DWG NO.	SHEET NO.
3.7 LBS.	019702-0101	1 OF 1
SCALE 1:2		DWG. SIZE D

THIS DOCUMENT CONTAINS TECHNOLOGY SUBJECT TO THE U.S. EXPORT ADMINISTRATION REGULATIONS (15 CFR PARTS 730-774) OR U.S. INTERNATIONAL TRAFFIC IN ARMS REGULATIONS (22 CFR PARTS 121-130). PRIOR U.S. GOVERNMENT AUTHORIZATION IS REQUIRED TO RELEASE OR TRANSFER THIS TECHNOLOGY TO A FOREIGN PERSON EITHER IN THE UNITED STATES OR IN A FOREIGN COUNTRY.

BOLT TORQUE: 160 -

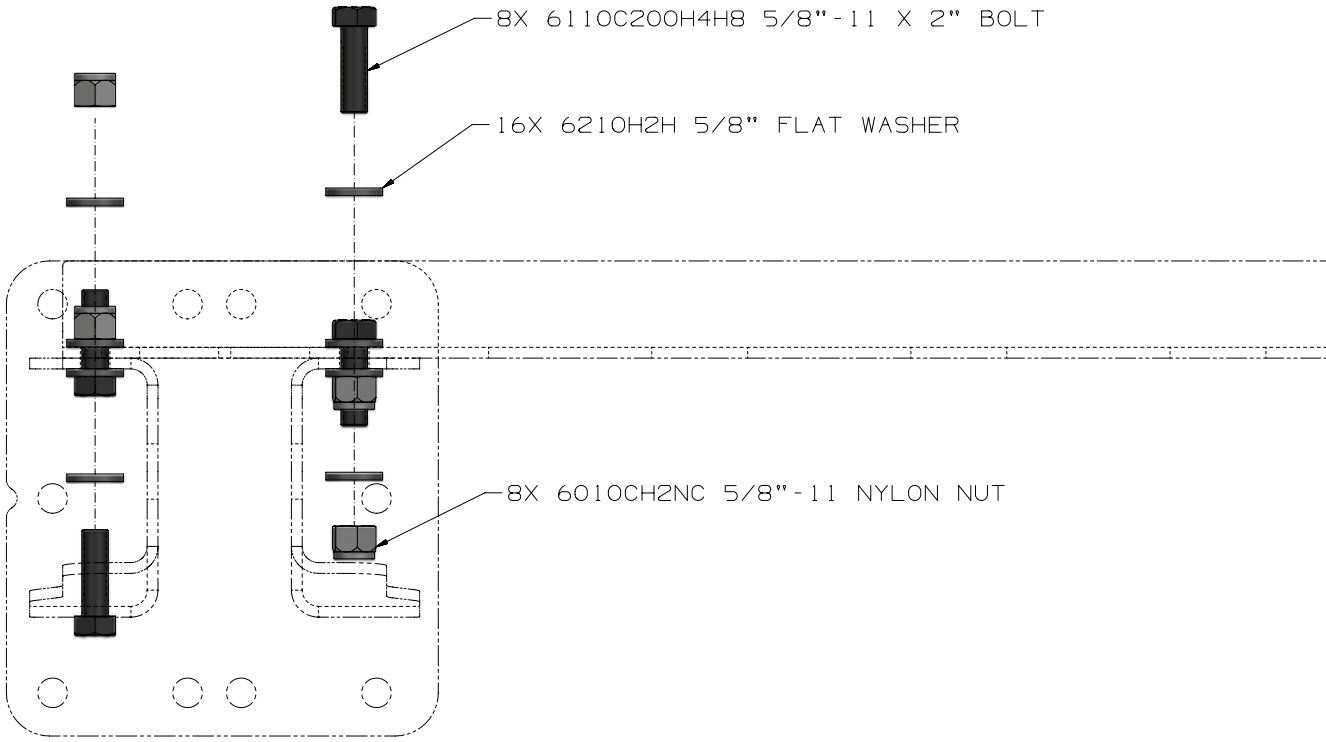

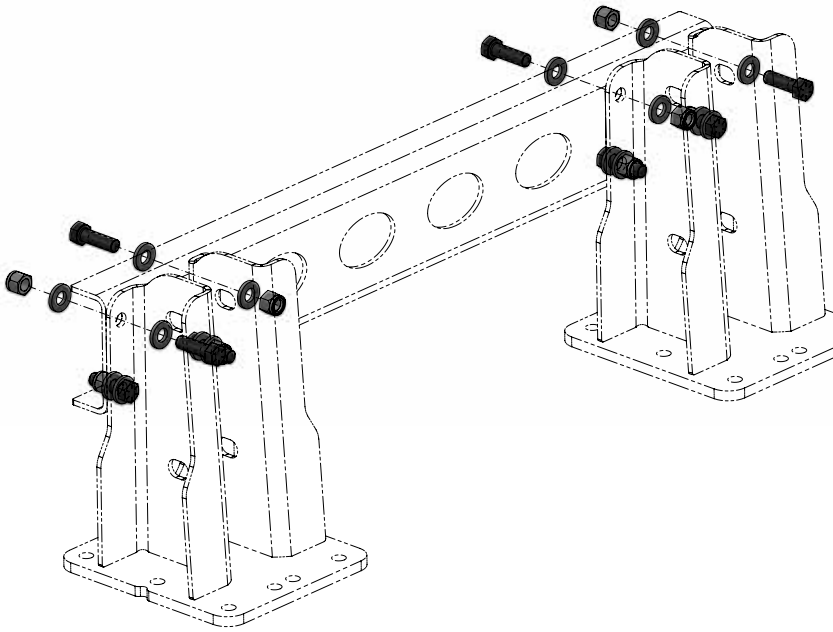

REV	ZONE	DESCRIPTION	BY / DATE	CHK / DATE	ENG / DATE	CN
A		RELEASED FOR PRODUCTION	JAG 02-19-21	HS 02-19-21	JAG 02-19-21	21-0149

180 ft-lb

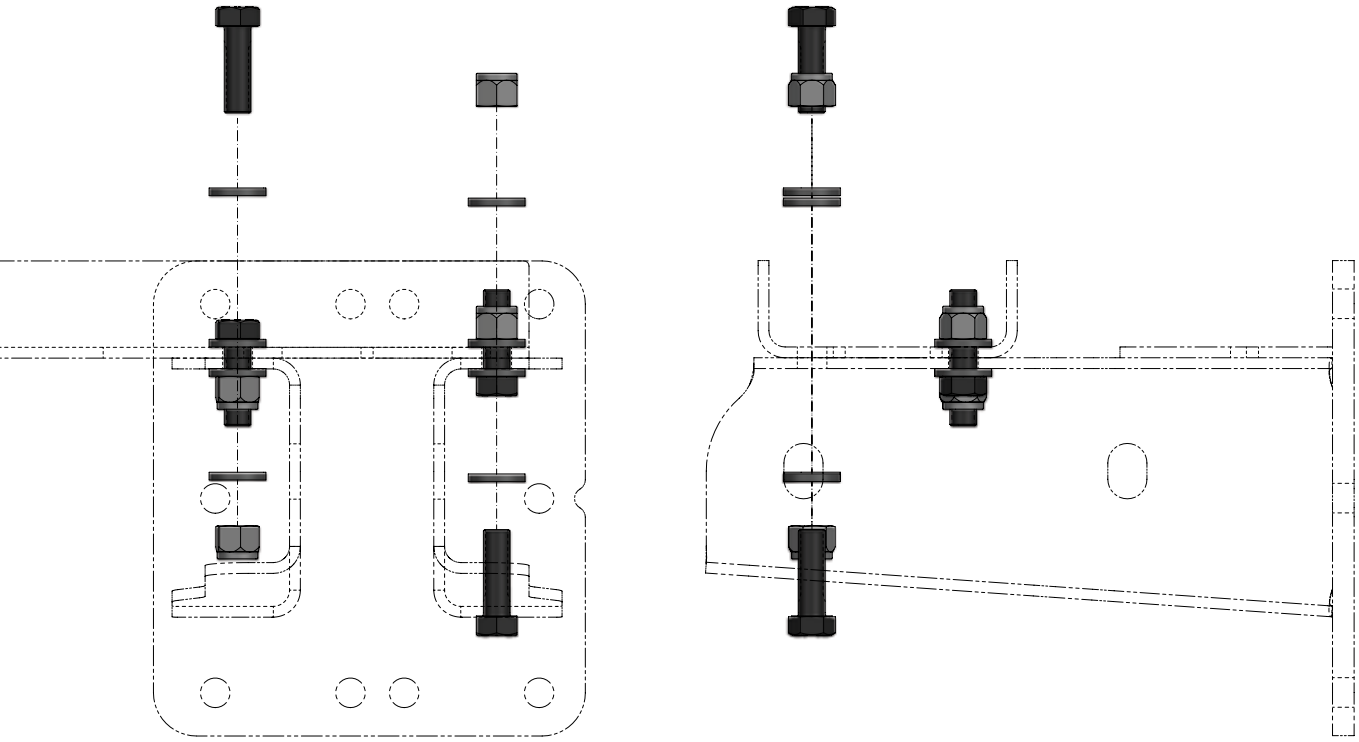

HENDRICKSON Auxiliary Axle Systems

PRODUCTION

Copyright © 2021 Hendrickson, All Rights Reserved.

THIS PRINT REMAINS THE PROPERTY OF HENDRICKSON SUSPENSION SYSTEMS. ALL INFORMATION CONTAINED THEREON IS CONFIDENTIAL. IT IS LOANED, SUBJECT TO RETURN ON DEMAND, AND ON EXPRESS CONDITION THAT IT IS NOT TO BE COPIED OR USED DIRECTLY OR INDIRECTLY FOR ANY PURPOSE OTHER THAN THE PURPOSE FOR WHICH IT HAS BEEN LOANED TO YOU.

CAD — CAD FILE UPDATE ON CAD SYSTEM ONLY!

METRIC — UNLESS OTHERWISE NOTED, DIMENSIONS AND TOLERANCES ARE DEFINED IN MILLIMETERS IN ACCORDANCE WITH ASME STANDARD Y14.5M - 1994

DRAWN BY: GUNTERMANN	DATE: 02-19-21	MAKE FROM: .	CUSTOMER: ALL
CHECKED BY: SLONAKER	DATE: 02-19-21	FOR MACHINING SEE: .	SUSPENSION TYPE: .
ENG. APPROVAL: GUNTERMANN	DATE: 02-19-21	FOR ASSEMBLY SEE: .	REF. LAYOUT: .
MFG. APPROVAL: .	DATE: .	REPLACES: .	REF. BOM: .
Q.C. APPROVAL: .	DATE: .	EQUIP.: .	ORIG. MFG. DWG.: .

DESCRIPTION: EX13 BOLT-ON CROSSMEMBER HARDWARE KIT - SADDLE NUTS AFT

MODEL WEIGHT	PART/DWG NO.	SHEET NO.
3.7 LBS.	019702-0102	1 OF 1
SCALE 1:2		DWG. SIZE D

THIS DOCUMENT CONTAINS TECHNOLOGY SUBJECT TO THE U.S. EXPORT ADMINISTRATION REGULATIONS (15 CFR PARTS 730-774) OR U.S. INTERNATIONAL TRAFFIC IN ARMS REGULATIONS (22 CFR PARTS 121-130). PRIOR U.S. GOVERNMENT AUTHORIZATION IS REQUIRED TO RELEASE OR TRANSFER THIS TECHNOLOGY TO A FOREIGN PERSON EITHER IN THE UNITED STATES OR IN A FOREIGN COUNTRY.

TRUC

BOLT TORQUE: 2

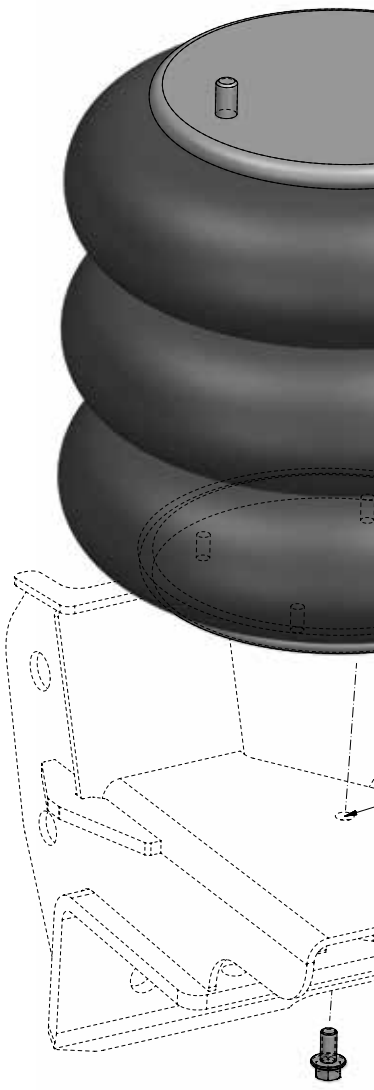

NOTE:
1. THIS PRINT DEMONSTRATES THE TRUCK UNIT INSTALLATION OF THE RIDE SPRING.

REV	ZONE	DESCRIPTION	BY / DATE	CHK / DATE	ENG / DATE	CN
A		RELEASED	SAK 10-06-20	CHS 12-09-20	AP 12-09-20	20-0793

K:

28 ±2Ft Lbs.

NON ROLL-OFF TRUCK SEATS WILL TYPICALLY ONLY HAVE 2 RIDE SPRING MOUNTING HOLES IN THEM.

2x
010061-0005
3/8"-16x3/4"
FLANGE BOLT

HENDRICKSON
Auxiliary Axle Systems

PRODUCTION

Copyright © 2020 Hendrickson. All Rights Reserved.

THIS PRINT REMAINS THE PROPERTY OF HENDRICKSON SUSPENSION SYSTEMS. ALL INFORMATION CONTAINED THEREON IS CONFIDENTIAL. IT IS LOANED, SUBJECT TO RETURN ON DEMAND, AND ON EXPRESS CONDITION THAT IT IS NOT TO BE COPIED OR USED DIRECTLY OR INDIRECTLY FOR ANY PURPOSE OTHER THAN THE PURPOSE FOR WHICH IT HAS BEEN LOANED TO YOU.

CAD — CAD FILE UPDATE ON CAD SYSTEM ONLY!

METRIC — UNLESS OTHERWISE NOTED, DIMENSIONS AND TOLERANCES ARE DEFINED IN MILLIMETERS IN ACCORDANCE WITH ASME STANDARD Y14.5M - 1994

DRAWN BY S.KOHLER	DATE 10-06-20	MAKE FROM .	CUSTOMER ALL
CHECKED BY SLONAKER	DATE 12-09-20	FOR MACHINING SEE .	SUSPENSION TYPE .
ENG. APPROVAL A.POWER	DATE 12-09-20	FOR ASSEMBLY SEE .	REF. LAYOUT .
MFG. APPROVAL .	DATE .	REPLACES .	REF. BOM .
Q.C. APPROVAL .	DATE .	EQUIP. .	ORIG. MFG. DWG. .

DESCRIPTION

EX TRUCK RIDE SPRING INSTALLATION DWG

MODEL WEIGHT	PART/DWG NO.	SHEET NO.
.00 KG.	007596-0103	1 OF 1
SCALE 1:2		DWG. SIZE D

THIS DOCUMENT CONTAINS TECHNOLOGY SUBJECT TO THE U.S. EXPORT ADMINISTRATION REGULATIONS (15 CFR PARTS 730-774) OR U.S. INTERNATIONAL TRAFFIC IN ARMS REGULATIONS (22 CFR PARTS 121-130). PRIOR U.S. GOVERNMENT AUTHORIZATION IS REQUIRED TO RELEASE OR TRANSFER THIS TECHNOLOGY TO A FOREIGN PERSON EITHER IN THE UNITED STATES OR IN A FOREIGN COUNTRY.

A FEW QUICK ROLL-OFF UNIT INDENTIFIERS:

1. THE UPPER A/S WELDMENT.
2. THE 4 HOLE SEAT ASSEMBLY IS ON A TRUCK UNIT (TRUCK UNITS WILL HAVE SIDE RAILS).
3. THE ROLL-OFF SPACERS ON SUSPENSION SIDE. NOTE, THIS INDENTIFIER IS NOT APPLICABLE ON THE PACCAR/PETERBILT UNITS.

TRUC

BOLT TORQ

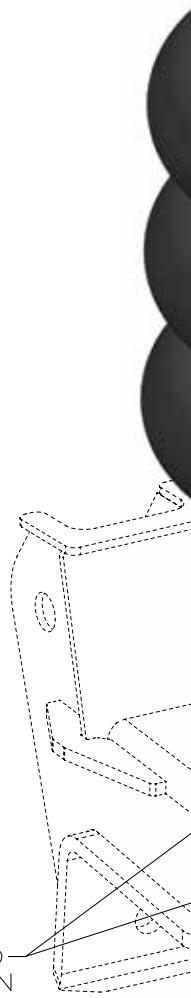

NOTE:

1. ROLL-OFF AND TRAILER UNITS USE THE SAME SEATS. YOU CAN IMMEDIATELY IDENTIFY THIS TYPE OF SEAT ASM BY THE 4 HOLES IN THE TOP PLATE.
2. PAY CLOSE ATTENTION TO WHICH SET OF HOLES TO USE PER THE TWO DIFFERENT APPLICATIONS.
3. THIS PRINT DEMONSTRATES THE TRUCK ROLL-OFF UNIT INSTALLATION.

REV	ZONE	DESCRIPTION	BY / DATE	CHK / DATE	ENG / DATE	CN
A		RELEASED	SAK 10-06-20	JHS 12-9-20	AP 12-9-20	20-0793

K ROLL-OFF:
UE: 28 ±2Ft Lbs.

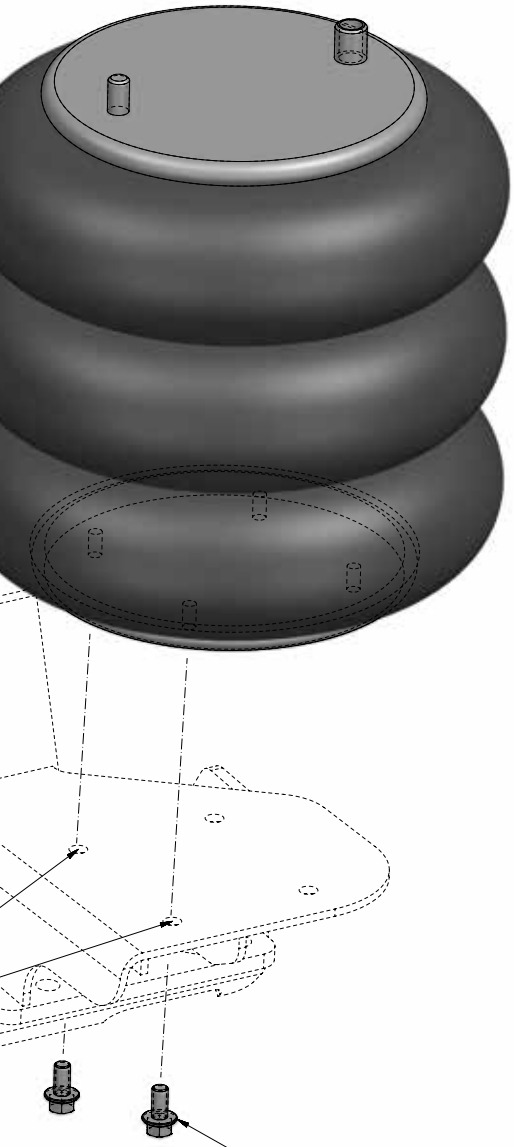

HENDRICKSON
Auxiliary Axle Systems

PRODUCTION

Copyright © 2020 Hendrickson. All Rights Reserved.

THIS PRINT REMAINS THE PROPERTY OF HENDRICKSON SUSPENSION SYSTEMS. ALL INFORMATION CONTAINED THEREON IS CONFIDENTIAL. IT IS LOANED, SUBJECT TO RETURN ON DEMAND, AND ON EXPRESS CONDITION THAT IT IS NOT TO BE COPIED OR USED DIRECTLY OR INDIRECTLY FOR ANY PURPOSE OTHER THAN THE PURPOSE FOR WHICH IT HAS BEEN LOANED TO YOU.

CAD — CAD FILE UPDATE ON CAD SYSTEM ONLY!

METRIC — UNLESS OTHERWISE NOTED, DIMENSIONS AND TOLERANCES ARE DEFINED IN MILLIMETERS IN ACCORDANCE WITH ASME STANDARD Y14.5M - 1994

DRAWN BY S.KOHLER	DATE 10-06-20	MAKE FROM .	CUSTOMER ALL
CHECKED BY SLONAKER	DATE 12-9-20	FOR MACHINING SEE .	SUSPENSION TYPE .
ENG. APPROVAL A.POWER	DATE 12-9-20	FOR ASSEMBLY SEE .	REF. LAYOUT .
MFG. APPROVAL .	DATE .	REPLACES .	REF. BOM .
Q.C. APPROVAL .	DATE .	EQUIP. .	ORIG. MFG. DWG. .

DESCRIPTION

EX ROLL-OFF RIDE SPRING
INSTALLATION DWG

MODEL WEIGHT	PART/DWG NO.	SHEET NO.
.00 KG.	007596-0102	1 OF 1
SCALE 1:1		DWG. SIZE D

THIS DOCUMENT CONTAINS TECHNOLOGY SUBJECT TO THE U.S. EXPORT ADMINISTRATION REGULATIONS (15 CFR PARTS 730-774) OR U.S. INTERNATIONAL TRAFFIC IN ARMS REGULATIONS (22 CFR PARTS 121-130). PRIOR U.S. GOVERNMENT AUTHORIZATION IS REQUIRED TO RELEASE OR TRANSFER THIS TECHNOLOGY TO A FOREIGN PERSON EITHER IN THE UNITED STATES OR IN A FOREIGN COUNTRY.

A FEW QUICK ROLL-OFF UNIT INDENTIFIERS:

1. THE UPPER A/S WELDMENT.
2. THE 4 HOLE SEAT ASSEMBLY IS ON A TRUCK UNIT (TRUCK UNITS WILL HAVE SIDE RAILS).
3. THE ROLL-OFF SPACERS ON SUSPENSION SIDE. NOTE, THIS INDENTIFIER IS NOT APPLICABLE ON THE PACCAR/PETERBILT UNITS.

TRUCK ROLL-OFF

3/8 IN BOLT TORQUE: 28 ±2Ft Lbs.
1/2 IN NUT TORQUE: 48 ±2Ft Lbs.
3/4 IN NUT TORQUE: 48 ±2Ft Lbs.

OUTBOARD HOLES TO BE U
FOR ROLL-OFF INSTALLAT

NOTE:

1. PAY CLOSE ATTENTION TO WHICH SET OF HOLES TO USE PER THE TWO DIFFERENT APPLICATIONS.
2. ROLL-OFF AND TRAILER UNITS USE THE SAME SEATS. YOU CAN IMMEDIATELY IDENTIFY THIS TYPE OF SEAT ASM BY THE 4 HOLES IN THE TOP PLATE.
3. THIS PRINT DEMONSTRATES THE TRUCK ROLL-OFF UNIT INSTALLATION.
4. LOCKTITE BLUE REQUIRED AT LOCK NUTS

REV	ZONE	DESCRIPTION	BY / DATE	CHK / DATE	ENG / DATE	CN
A		RELEASED FOR PRODUCTION	JAG 11-02-22	JHS 11-02-22	JAG 11-02-22	22-0415

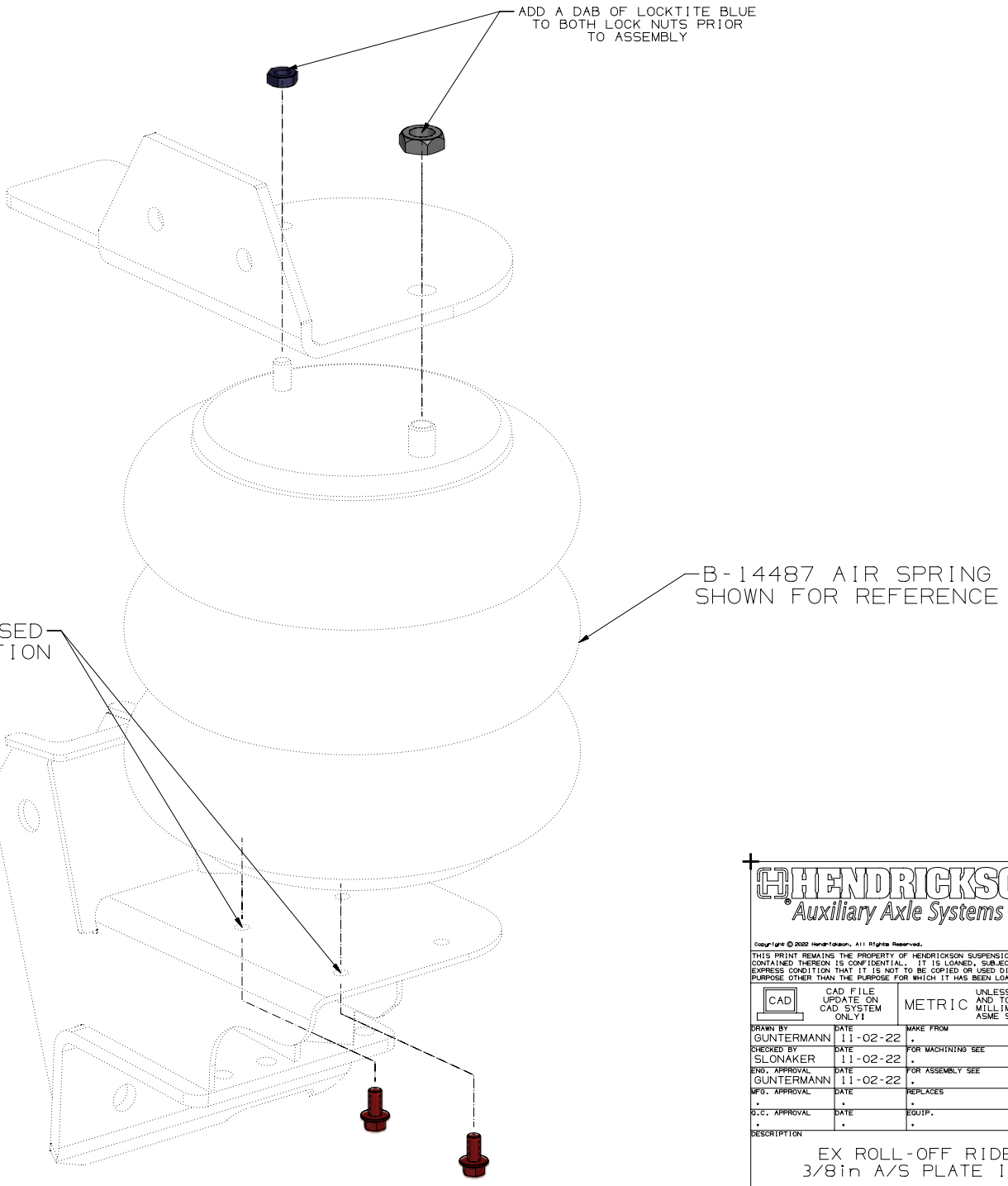

HENDRICKSON Auxiliary Axle Systems

PRODUCTION

Copyright © 2022 Hendrickson. All Rights Reserved.

THIS PRINT REMAINS THE PROPERTY OF HENDRICKSON SUSPENSION SYSTEMS. ALL INFORMATION CONTAINED THEREON IS CONFIDENTIAL. IT IS LOANED, SUBJECT TO RETURN ON DEMAND, AND ON EXPRESS CONDITION THAT IT IS NOT TO BE COPIED OR USED DIRECTLY OR INDIRECTLY FOR ANY PURPOSE OTHER THAN THE PURPOSE FOR WHICH IT HAS BEEN LOANED TO YOU.

CAD — CAD FILE UPDATE ON CAD SYSTEM ONLY!

METRIC — UNLESS OTHERWISE NOTED, DIMENSIONS AND TOLERANCES ARE DEFINED IN MILLIMETERS IN ACCORDANCE WITH ASME STANDARD Y14.5M - 1994

DRAWN BY: GUNTERMANN	DATE: 11-02-22	MAKE FROM: .	CUSTOMER: ALL
CHECKED BY: SLONAKER	DATE: 11-02-22	FOR MACHINING SEE: .	SUSPENSION / PROGRAM: .
ENG. APPROVAL: GUNTERMANN	DATE: 11-02-22	FOR ASSEMBLY SEE: .	REF. LAYOUT: .
MFG. APPROVAL: .	DATE: .	REPLACES: .	REF. BOM: .
Q.C. APPROVAL: .	DATE: .	EQUIP.: .	ORIG. MFG. DWG.: .

DESCRIPTION: EX ROLL-OFF RIDE SPRING, 3/8in A/S PLATE INSTALL DWG

MODEL WEIGHT	PART/DWG NO.	SHEET NO.
.00 KG	007596-0201	1 OF 1
SCALE: 1:1		DWG. SIZE: D

THIS DOCUMENT CONTAINS TECHNOLOGY SUBJECT TO THE U.S. EXPORT ADMINISTRATION REGULATIONS (15 CFR PARTS 730-774) OR U.S. INTERNATIONAL TRAFFIC IN ARMS REGULATIONS (22 CFR PARTS 121-130). PRIOR U.S. GOVERNMENT AUTHORIZATION IS REQUIRED TO RELEASE OR TRANSFER THIS TECHNOLOGY TO A FOREIGN PERSON EITHER IN THE UNITED STATES OR IN A FOREIGN COUNTRY.

ITEM	PART NUMBER	DESCRIPTION	QTY
1	018948-0200	EX RIDE SPRING HARDWARE KIT_TRAILER	1

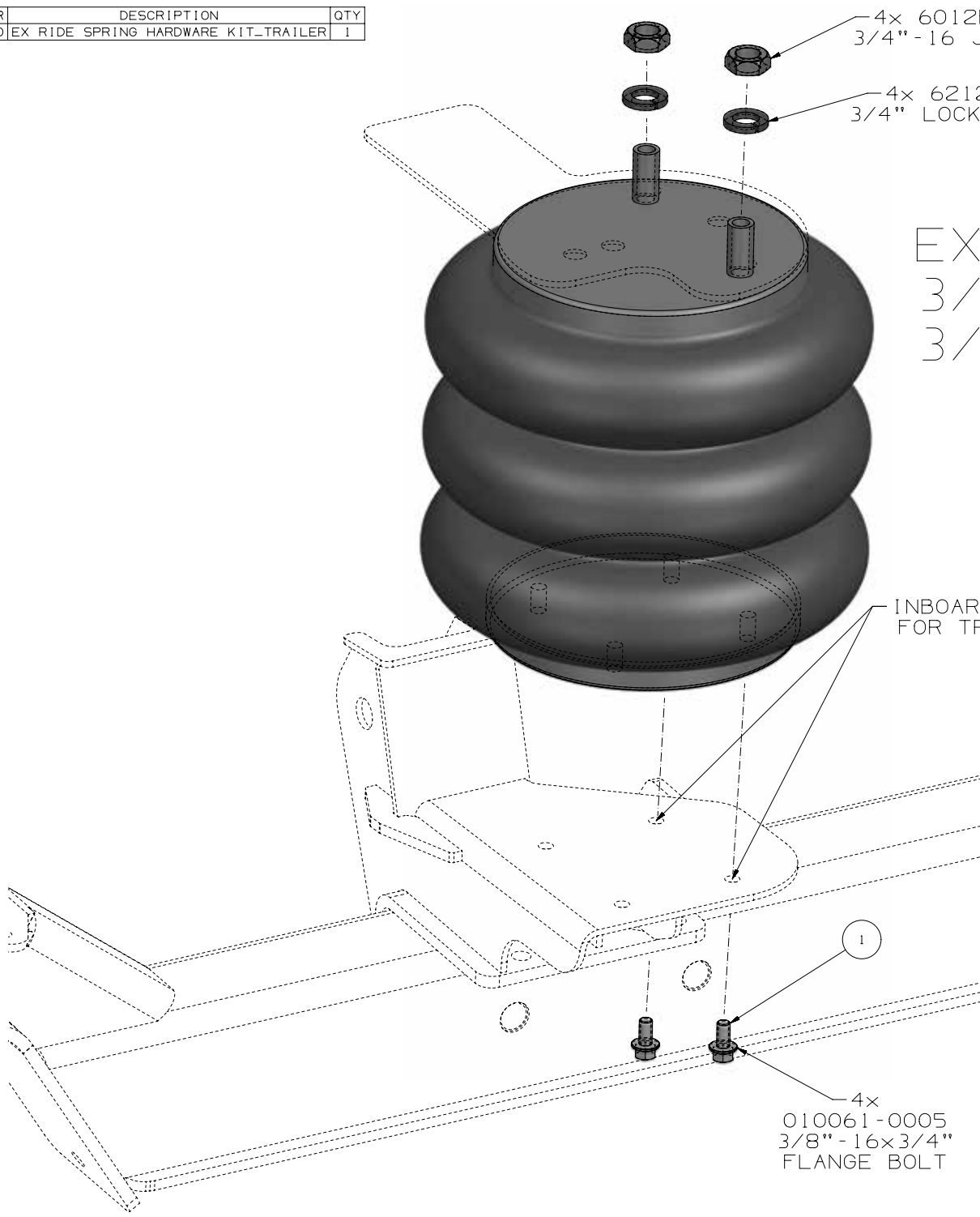

NOTE:
1. ROLL-OFF AND TRAILER UNITS USE THE SAME SEATS. YOU CAN IMMEDIATELY IDENTIFY THIS TYPE OF SEAT ASM BY THE 4 HOLES IN THE TOP PLATE.
2. PAY CLOSE ATTENTION TO WHICH SET OF HOLES TO USE PER THE TWO DIFFERENT APPLICATIONS.
3. THIS PRINT DEMONSTRATES THE TRAILER UNIT INSTALLATION.
4. KIT CONTAINS PARTS FOR BOTH LEFT AND RIGHT AND SIDES (LEFT HAND SIDE SHOWN).

REV	ZONE	DESCRIPTION	BY / DATE	CHK / DATE	ENG / DATE	CN
A		RELEASED	SAK 1/22/21	JHS 1/22/21	AP 1/22/21	21-0066

FH2JB
JAM NUT

2H2LR
WASHER

13 TRAILER BUILD:TORQUE SPECS
8"-16 BOLT BOLT: 28 ±2Ft Lbs.
4"-16 BOLT BOLT: 48 ±2Ft Lbs.

D HOLES TO BE USED
RAILER INSTALLATION

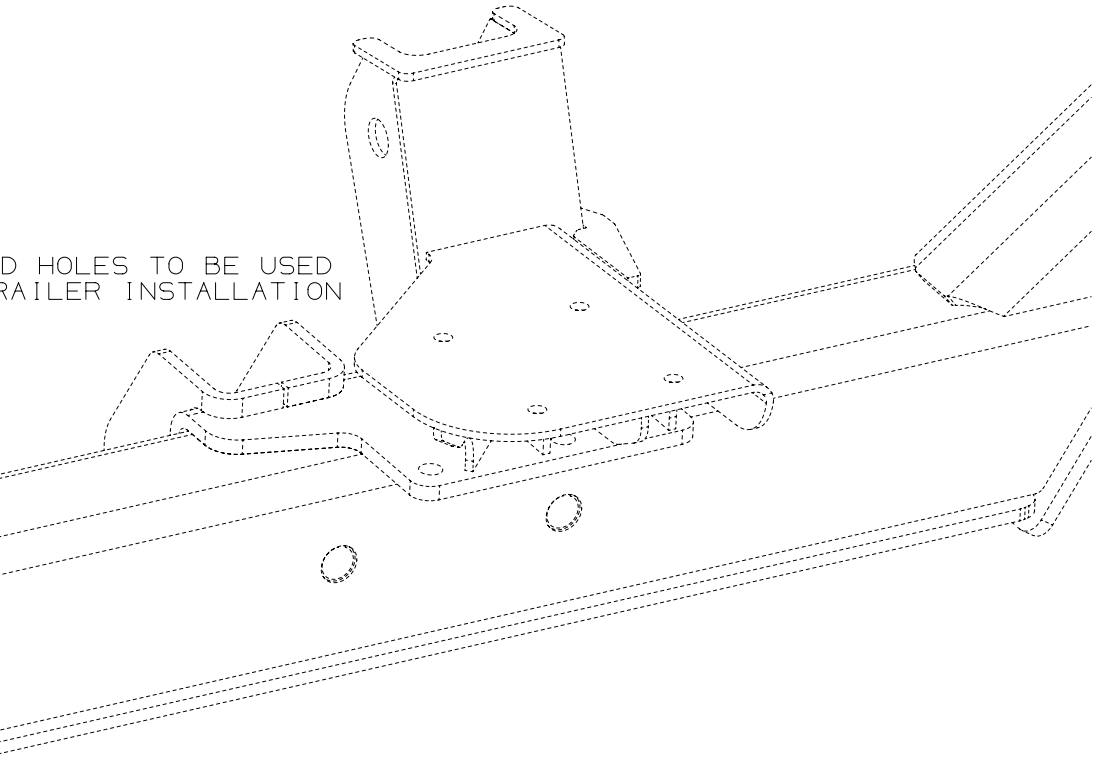

HENDRICKSON Auxiliary Axle Systems

PRODUCTION

Copyright © 2021 Hendrickson. All Rights Reserved.

THIS PRINT REMAINS THE PROPERTY OF HENDRICKSON SUSPENSION SYSTEMS. ALL INFORMATION CONTAINED THEREON IS CONFIDENTIAL. IT IS LOANED, SUBJECT TO RETURN ON DEMAND, AND ON EXPRESS CONDITION THAT IT IS NOT TO BE COPIED OR USED DIRECTLY OR INDIRECTLY FOR ANY PURPOSE OTHER THAN THE PURPOSE FOR WHICH IT HAS BEEN LOANED TO YOU.

CAD — CAD FILE UPDATE ON CAD SYSTEM ONLY!

METRIC — UNLESS OTHERWISE NOTED, DIMENSIONS AND TOLERANCES ARE DEFINED IN MILLIMETERS IN ACCORDANCE WITH ASME STANDARD Y14.5M - 1994

DRAWN BY S.KOHLER	DATE 1/22/21	MAKE FROM .	CUSTOMER ALL
CHECKED BY SLONAKER	DATE 1/22/21	FOR MACHINING SEE .	SUSPENSION TYPE .
ENG. APPROVAL A.POWER	DATE 1/22/21	FOR ASSEMBLY SEE .	REF. LAYOUT .
MFG. APPROVAL .	DATE .	REPLACES .	REF. BOM .
Q.C. APPROVAL .	DATE .	EQUIP. .	ORIG. MFG. DWG. .

DESCRIPTION: EX TRAILER RIDE SPRING INSTALLATION DWG

MODEL WEIGHT	PART/DWG NO.	SHEET NO.
.00 KG.	018948-0202	1 OF 1
SCALE 1:1		DWG. SIZE D

THIS DOCUMENT CONTAINS TECHNOLOGY SUBJECT TO THE U.S. EXPORT ADMINISTRATION REGULATIONS (15 CFR PARTS 730-774) OR U.S. INTERNATIONAL TRAFFIC IN ARMS REGULATIONS (22 CFR PARTS 121-130). PRIOR U.S. GOVERNMENT AUTHORIZATION IS REQUIRED TO RELEASE OR TRANSFER THIS TECHNOLOGY TO A

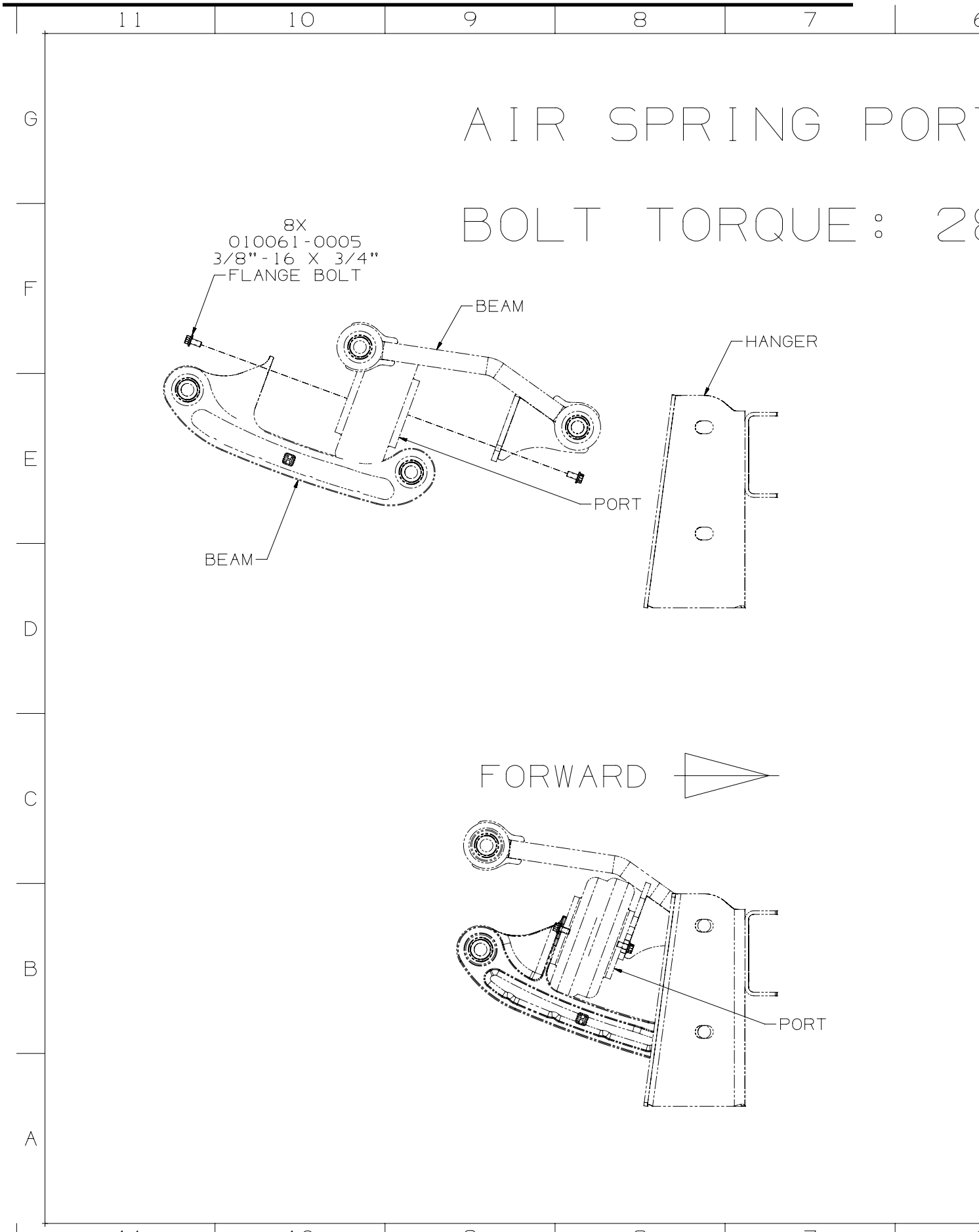
AIR SPRING PORT
BOLT TORQUE: 28
8X
010061-0005
3/8"-16 X 3/4"
FLANGE BOLT
BEAM
HANGER
PORT
BEAM
FORWARD
PORT

REV	ZONE	DESCRIPTION	BY / DATE	CHK / DATE	ENG / DATE	CN
A		RELEASED FOR PRODUCTION	JAB 04-16-18	MJM 04-16-18	AJW 04-16-18	18-0387

T: FORWARD

8 ±2 ft-lb

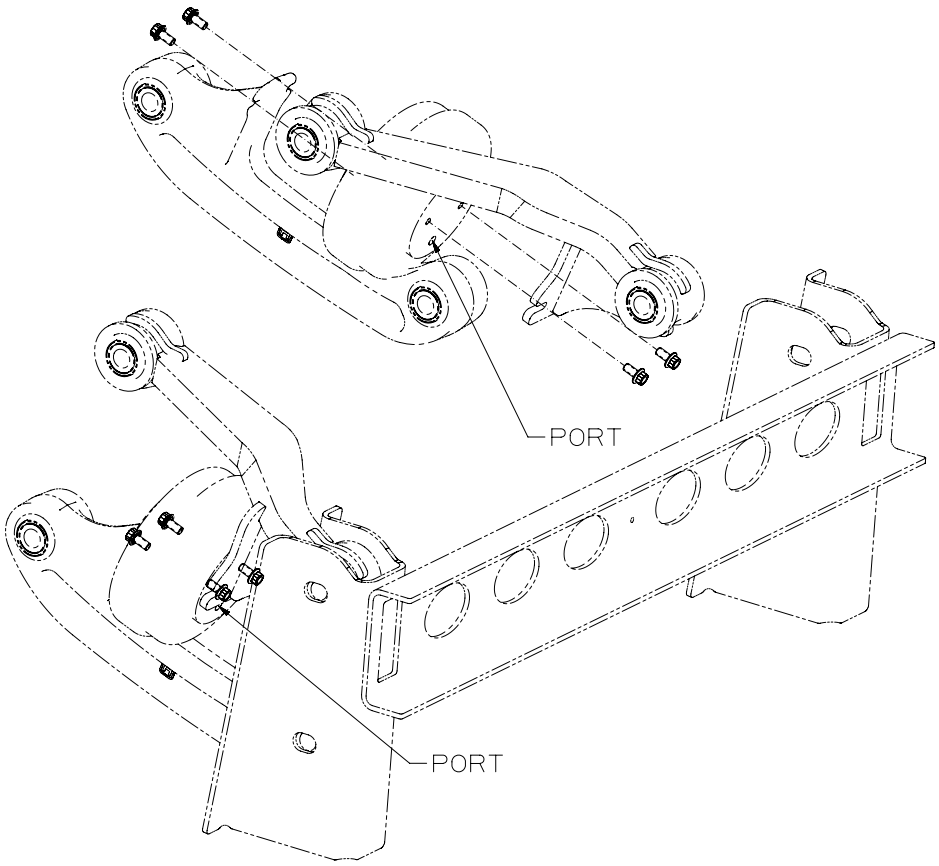

HENDRICKSON
Auxiliary Axle Systems

PRODUCTION

Copyright © 2018 Hendrickson, All Rights Reserved

THIS PRINT REMAINS THE PROPERTY OF HENDRICKSON SUSPENSION SYSTEMS. ALL INFORMATION CONTAINED THEREON IS CONFIDENTIAL. IT IS LOANED, SUBJECT TO RETURN ON DEMAND, AND ON EXPRESS CONDITION THAT IT IS NOT TO BE COPIED OR USED DIRECTLY OR INDIRECTLY FOR ANY PURPOSE OTHER THAN THE PURPOSE FOR WHICH IT HAS BEEN LOANED TO YOU.

CAD — CAD FILE UPDATE ON CAD SYSTEM ONLY!

METRIC — UNLESS OTHERWISE NOTED, DIMENSIONS AND TOLERANCES ARE DEFINED IN MILLIMETERS IN ACCORDANCE WITH ASME STANDARD Y14.5M - 1994

DRAWN BY: J.BIRO	DATE: 04-16-18	MAKE FROM: .	CUSTOMER: ALL
CHECKED BY: McCARTHY	DATE: 04-16-18	FOR MACHINING SEE: .	SUSPENSION TYPE: .
ENG. APPROVAL: WESTNEDGE	DATE: 04-16-18	FOR ASSEMBLY SEE: .	REF. LAYOUT: .
MFG. APPROVAL: .	DATE: .	REPLACES: .	REF. BOM: .
Q.C. APPROVAL: .	DATE: .	EQUIP.: .	ORIG. MFG. DWG.: .

DESCRIPTION: EX LIFT SPRING ATTACHMENT PORT FORWARD

MODEL WEIGHT	PART/DWG NO.	SHEET NO.
.00 LBS.	019701-0101	1 OF 1
SCALE 1:4		DWG. SIZE D

THIS DOCUMENT CONTAINS TECHNOLOGY SUBJECT TO THE U.S. EXPORT ADMINISTRATION REGULATIONS (15 CFR PARTS 730-774) OR U.S. INTERNATIONAL TRAFFIC IN ARMS REGULATIONS (22 CFR PARTS 121-130). PRIOR U.S. GOVERNMENT AUTHORIZATION IS REQUIRED TO RELEASE OR TRANSFER THIS TECHNOLOGY TO A FOREIGN PERSON EITHER IN THE UNITED STATES OR IN A FOREIGN COUNTRY.

AIR SPRING PO

BOLT TORQUE: 2

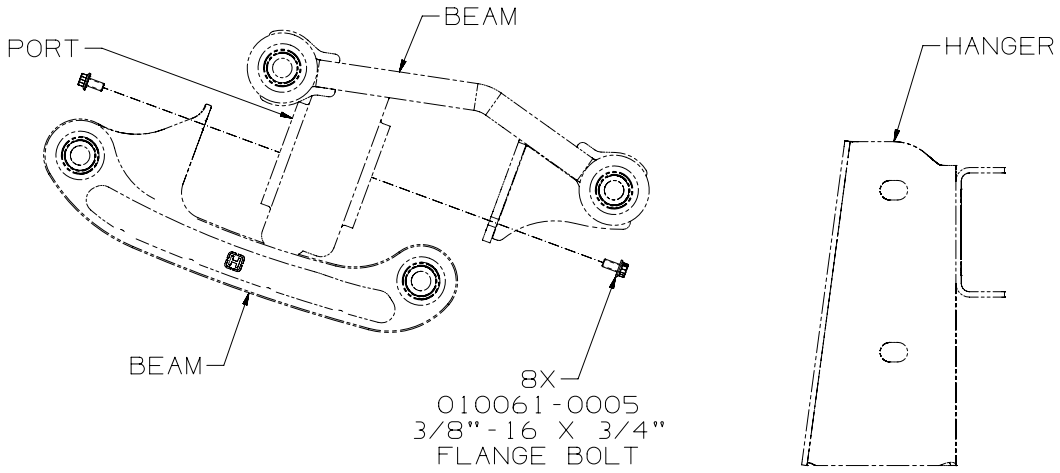

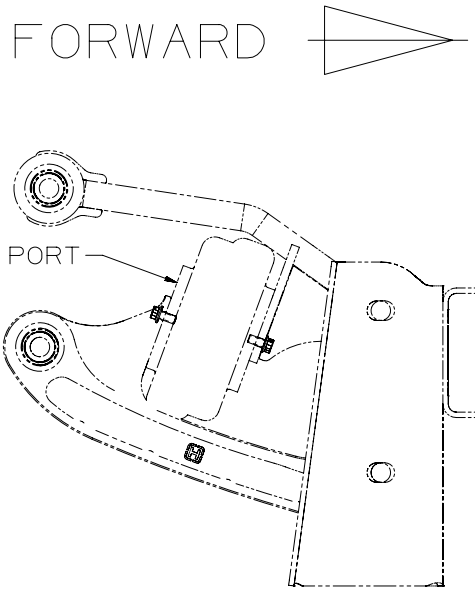

REV	ZONE	DESCRIPTION	BY / DATE	CHK / DATE	ENG / DATE	CN
A		RELEASED FOR PRODUCTION	JAB 04-16-18	MJM 04-16-18	AJW 04-16-18	18-0387

ORT: REAR

8 ±2 ft-lb

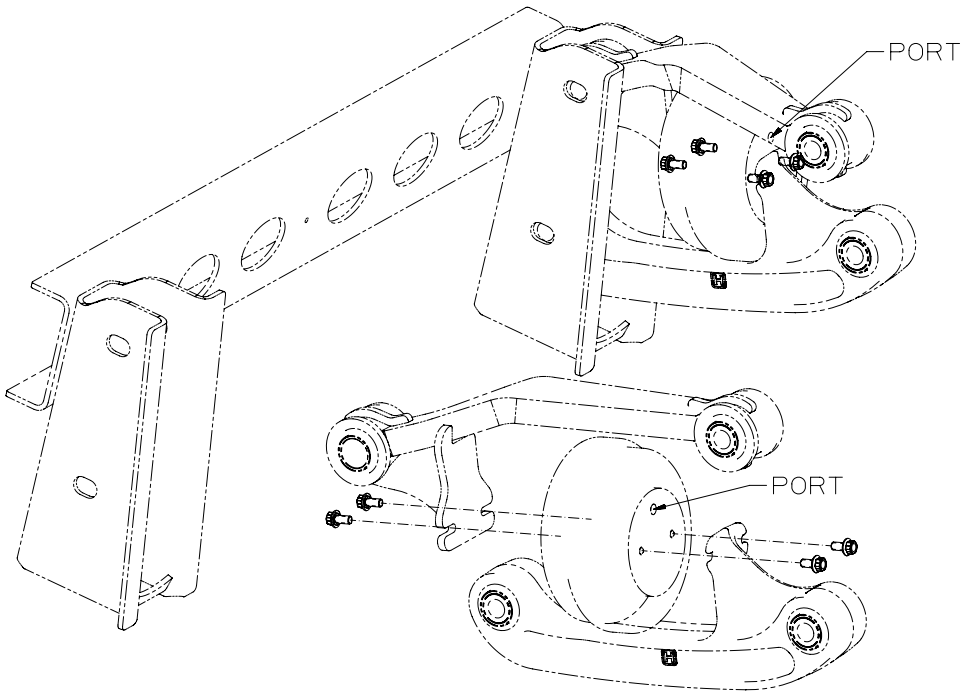

HENDRICKSON
Auxiliary Axle Systems

PRODUCTION

Copyright © 2018 Hendrickson, All Rights Reserved

THIS PRINT REMAINS THE PROPERTY OF HENDRICKSON SUSPENSION SYSTEMS. ALL INFORMATION CONTAINED THEREON IS CONFIDENTIAL. IT IS LOANED, SUBJECT TO RETURN ON DEMAND, AND ON EXPRESS CONDITION THAT IT IS NOT TO BE COPIED OR USED DIRECTLY OR INDIRECTLY FOR ANY PURPOSE OTHER THAN THE PURPOSE FOR WHICH IT HAS BEEN LOANED TO YOU.

CAD — CAD FILE UPDATE ON CAD SYSTEM ONLY!

METRIC — UNLESS OTHERWISE NOTED, DIMENSIONS AND TOLERANCES ARE DEFINED IN MILLIMETERS IN ACCORDANCE WITH ASME STANDARD Y14.5M - 1994

DRAWN BY: J.BIRO	DATE: 04-16-18	MAKE FROM: .	CUSTOMER: ALL
CHECKED BY: McCARTHY	DATE: 04-16-18	FOR MACHINING SEE: .	SUSPENSION TYPE: .
ENG. APPROVAL: WESTNEDGE	DATE: 04-16-18	FOR ASSEMBLY SEE: .	REF. LAYOUT: .
MFG. APPROVAL: .	DATE: .	REPLACES: .	REF. BOM: .
Q.C. APPROVAL: .	DATE: .	EQUIP.: .	ORIG. MFG. DWG.: .

DESCRIPTION: EX LIFT SPRING ATTACHMENT PORT REAR

MODEL WEIGHT	PART/DWG NO.	SHEET NO.
.00 LBS.	019701-0102	1 OF 1
SCALE 1:4		DWG. SIZE D

THIS DOCUMENT CONTAINS TECHNOLOGY SUBJECT TO THE U.S. EXPORT ADMINISTRATION REGULATIONS (15 CFR PARTS 730-774) OR U.S. INTERNATIONAL TRAFFIC IN ARMS REGULATIONS (22 CFR PARTS 121-130). PRIOR U.S. GOVERNMENT AUTHORIZATION IS REQUIRED TO RELEASE OR TRANSFER THIS TECHNOLOGY TO A FOREIGN PERSON EITHER IN THE UNITED STATES OR IN A FOREIGN COUNTRY.