PARTS LIST

HN® VariRate® Spring Rear Suspension System

LIT NO: SP-212
DATE: September 2026 **REVISION:** H

CONTENTS

DESCRIPTION	PAGE
Parts Lists HN® 40K • 46K • 52K lb Capacity	
■ Vehicles built after November 2000	2
■ Vehicles built between September 1998 to November 2000	4
■ Vehicles built between April 1996 to August 1998	6
Notes	5
Special Tools	8

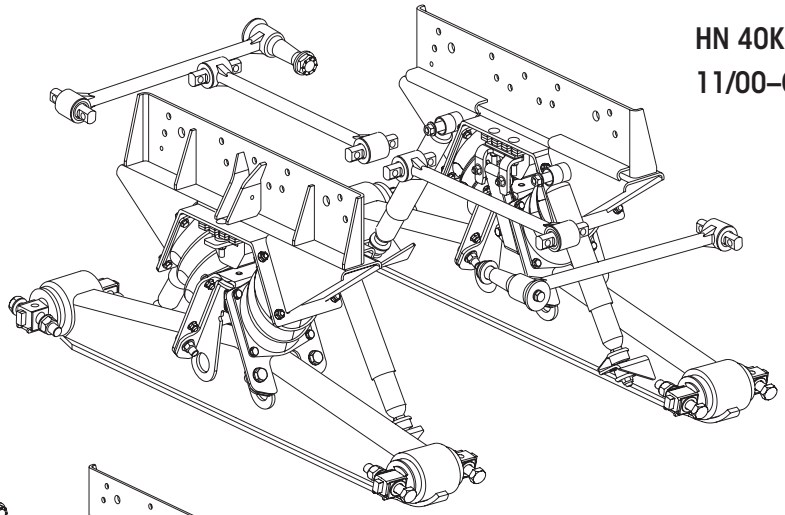

HN 40K • 46K • 52K
11/00–Current

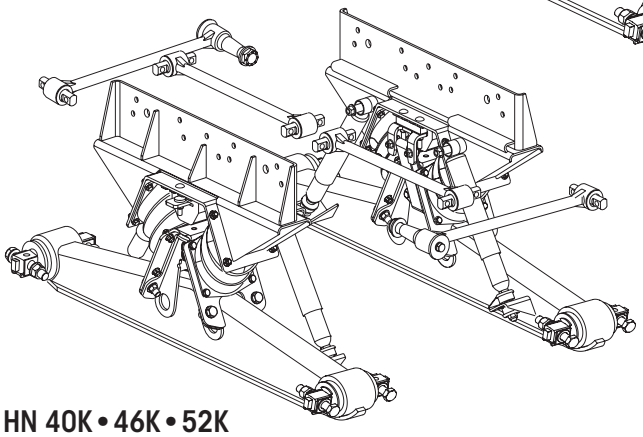

HN 40K • 46K • 52K
9/98–11/00

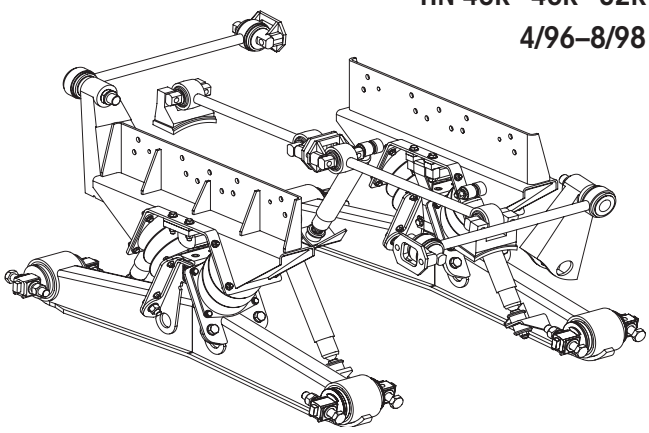

HN 40K • 46K • 52K
4/96–8/98

HENDRICKSON
The World Rides On Us®

HN 40K • 46K • 52K lb Capacity

Vehicles built after November 2000

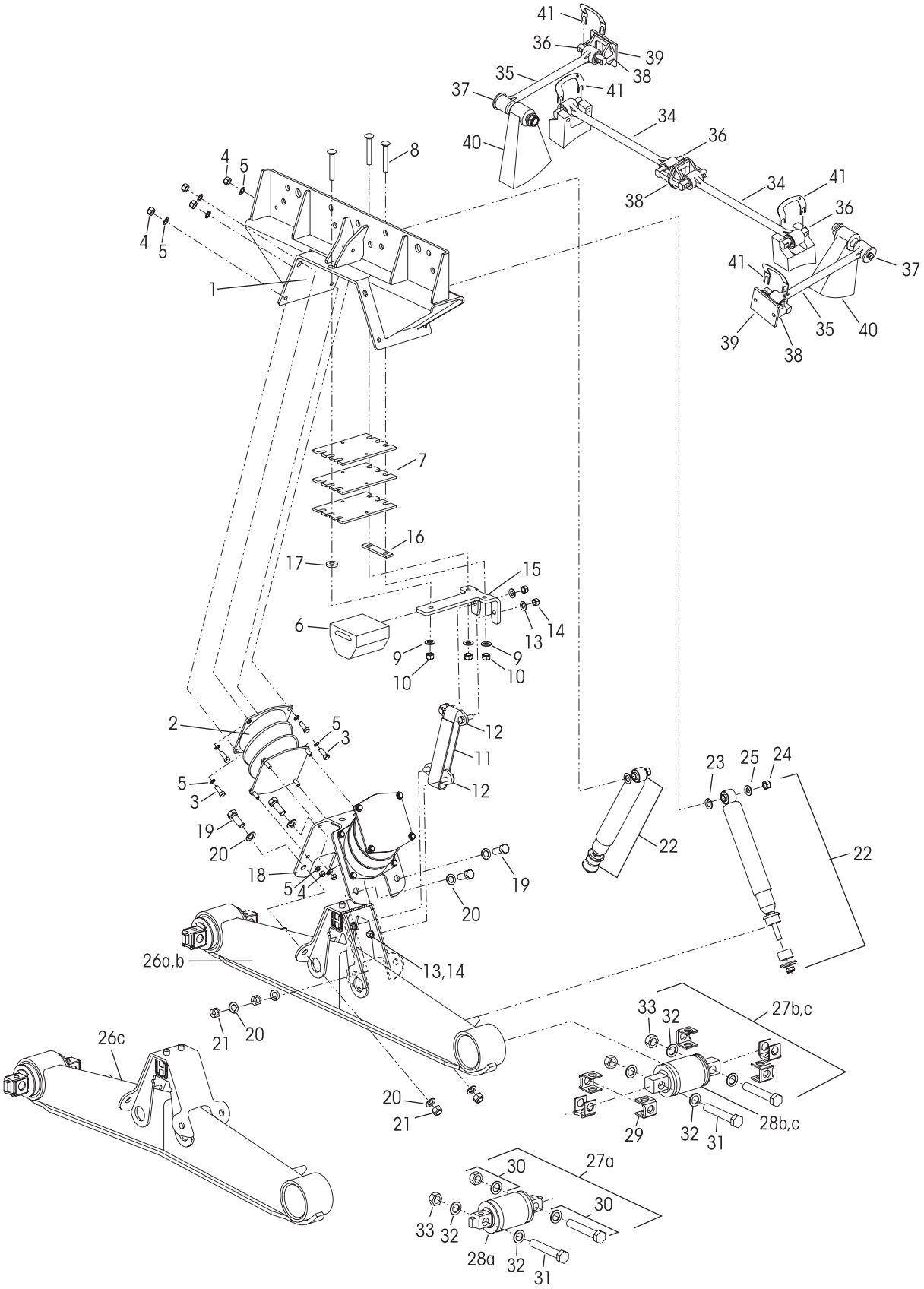

KEY NO.	PART NO.	DESCRIPTION	VEHICLE QTY.
1		Saddle Assembly, Includes Key Nos. 2-18	2
		See Figure 1 below to identify Part No.	
	95409-XXX	16½", 17½" or 18½", *Replaces 60686-0XX*	
	95410-XXX	20¼" or 22½", *Replaces 58650-0XX*	
	60879-000L	**Bolster Spring Service Kit, One Set,** (2 pc) Includes Key No. 2	
2		*Bolster Spring	4
	34013-462	**Bolster Spring Fastener Service Kit, One Side,** Includes Key Nos. 3-5	
3	25114-011	7/16"-20 UNF x 1¼" Bolt	32
4	48949-000	7/16"-20 UNF-2B Locknut	32
5	22962-027	7/16" Washer	64
6	60314-000	Auxiliary Load Spring	2
7	58960-003L	Auxiliary Load Spring Shim	6
8	58196-006	½"-13 UNC x 2¾" Round Head Square Neck Bolt *Replaces 58196-005*	6
9	22962-011	½" Washer	6
10	49846-000	½"-13 UNC-2A Locknut	6
11	57878-003	Rebound Strap	2
	60639-000	Anchor Plate Assembly, Includes Key Nos. 12-14	4
12		*Anchor Plate	4
13		*½" Washer	8
14		*½"-13 UNC-2A Locknut	8
15	58948-001	Auxiliary Load Spring Mounting Plate	2
16	58949-000	Auxiliary Load Spring Mounting Plate Shim (Inboard - ¼" thick)	2
17	22962-020	Outboard Spacer (¼" thick)	2
18	58343-001	Saddle Vee Bracket	2
		Vee Bracket Fastener Service Kits,	
	58440-001	**One Side,** Includes Key Nos. 19-21	
	58440-002	**Axle Set,** Includes Key Nos. 19-21	
19	50764-006	¾"-10 UNC-2A x 2" Hex Head Bolt	8
20	22962-001	¾" Washer	16
21	49842-000	¾"-10 UNC-2B Locknut	8
22	60680-003L	Shock Absorber	4
23	22962-001	¾" Washer	4
24	30585-000	⅝" Upper Shock Locknut	4
25	22962-004	⅝" Upper Shock Washer	4
26		Equalizing Beam Assembly	2
a	58494-001	46K, 54" Non-Shim Type	
	58494-002	46K, 54" Shim Type	
	58494-005	40K • 46K, 60" Non-Shim Type	
	58494-006	40K • 46K, 60" Shim Type	
	58494-009	40K • 46K, 72½" Non-Shim Type	
	58494-010	40K • 46K, 72½" Shim Type	
b	59973-003	52K, 54" Shim Type	
c	57889-004	40K, 52" Non-Shim Type	
	57889-005	40K, 52" Shim Type	
	57889-001	40K, 54" Non-Shim Type	
	57889-002	40K, 54" Shim Type	
27		**Bar Pin End Bushing Service Kit, One Wheel End,**	
a	34013-087L	Non-Shim Type, 28a, 30	
b	34013-088L	Shim Type, Includes Key No. 28b, 29a-30	
c	34013-188L	Rotating, Shim Type, 28c, 29a-30	
28		*Bar Pin End Bushing	4
a		Non-Shim Type	
b		Shim Type	
c		Rotating, Shim Type	
29		Bar Pin Shim	8
a	50130-000	3/16" • 3/16" Standard	
b	50131-000	¼" • ⅛" Optional	
c	57026-000	⅜" Optional flat shim	
30	34013-104	**Bar Pin End Bushing Fastener Kit, One Wheel End,** Includes Key Nos. 31-33	
31	48941-000	1"-8 UNC x 6" Hex Bolt	8
32	22962-008	1" Hardened Washer	16
33	48942-000	1"-8 UNC Locknut	8
34		**One-piece Longitudinal Torque Rod Assembly, Straddle/Straddle, Specify Length in mm	
		ULTRA ROD®, Includes Key No. 36	
	62000-XXX	Front	1
	62001-XXX	Rear	1
	8240-00XX-XXX	****TRAAX ROD®, *Replaces 72000-XXX and 72001-XXX*	2
35		***One-piece Transverse Torque Rod Assembly, Straddle/Taper, Specify Length in mm	2
	62350-XXX	ULTRA ROD, Includes Key Nos. 36-37	
	8244-0099-XXX	****TRAAX ROD, *Replaces 72350-XXX*	
	8233-0099-XXX	****TRAAX ROD, *Replaces 92350-XXX*	
36	47691-000L	Straddle Bushing	4
37	64697-000L	Taper Bushing	2
		Optional Two-Piece Torque Rod Assembly with Bushings Service Kit	
	60218-000	ULTRA ROD Straddle/Straddle	
	60215-000	ULTRA ROD Straddle/Taper	
	65781-000	ULTRA ROD PLUS Straddle/Taper	
	65781-001	XTRB Straddle/Straddle	
	65781-002	XTRB Straddle/Taper	
38	22186-000	Torque Rod Frame Bracket	2
39	45045-010	Backup Plate, *Replaces 45045-003*	2
40		*****Transverse Rod Axle Bracket	2
41	49689-000	Torque Rod Shim	As Req.
	70867-001	P-80 Lubricant - 10 ml (Not Shown)	Per Bushing 1

FIGURE 1

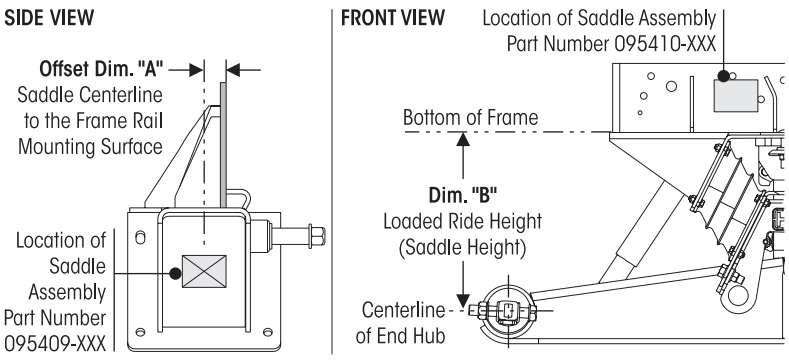

To Identify the Saddle Assembly Part Number:

1. Check the saddle assembly for a visible part number, see location on Side View / Front View.
2. If the part number is missing or illegible:
   - Measure **Offset (Dimension "A")** and **Saddle Height (Dimension "B")**.
   - Contact Hendrickson Tech Services with these measurements.
3. Alternatively, provide the vehicle manufacturer with the following to obtain the correct part number
   - The **VIN** (Vehicle Identification Number).
   - The **Saddle Height (Dimension "B")**

For all (*) see Notes on Page 5

HN 40K • 46K • 52K lb Capacity

Vehicles built between September 1998 and November 2000

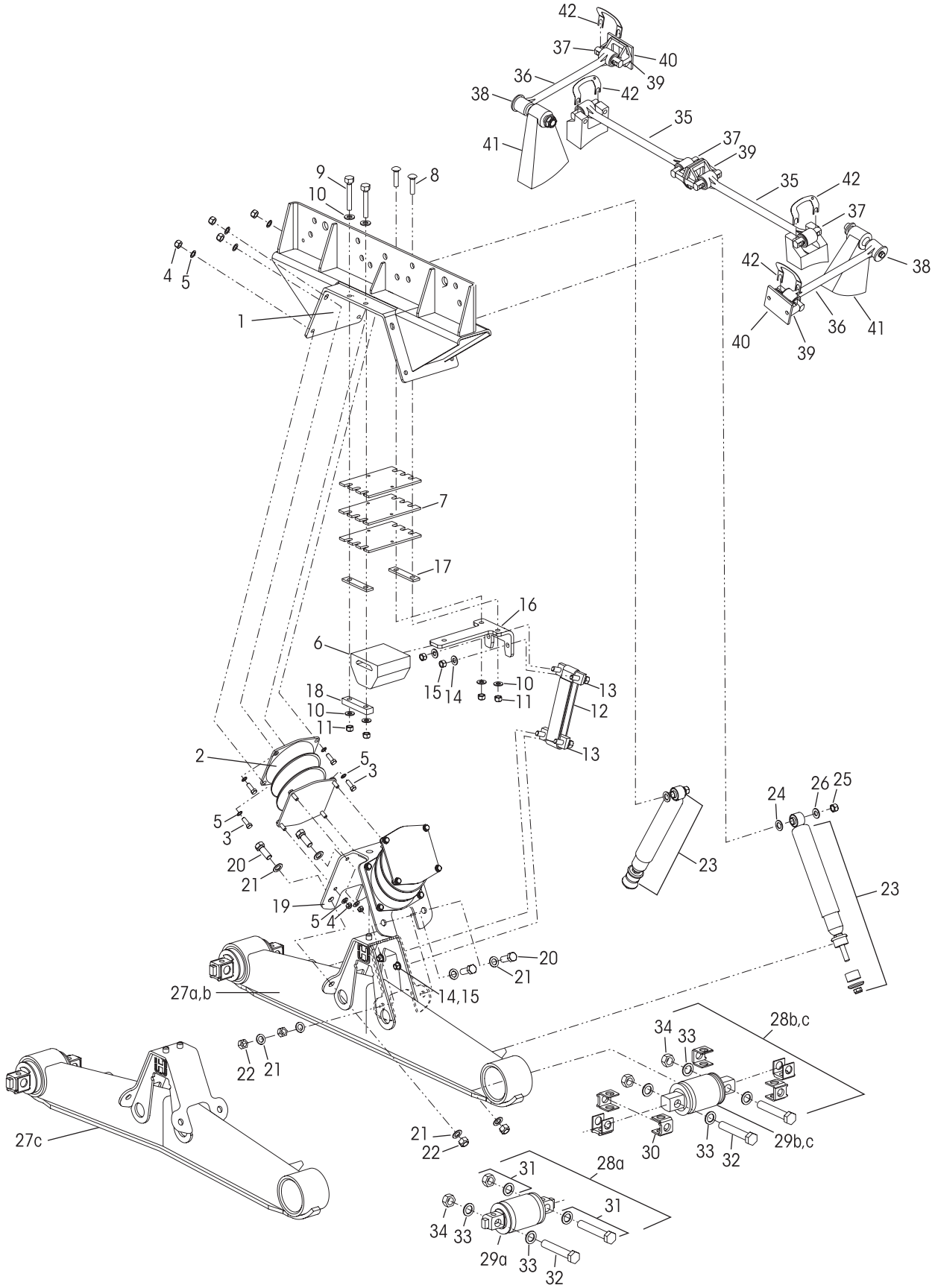

KEY NO.	PART NO.	DESCRIPTION	VEHICLE QTY.
1		Saddle Assembly, Includes Key Nos. 2-19 *See Figure 1 on Page 3*	2
	95409-XXX	16½", 17½" or 18½", *Replaces 60686-0XX*	
	95410-XXX	20¼" or 22½", *Replaces 58650-0XX*	
	60879-000L	**Bolster Spring Service Kit, One Set,** (2 pc) Includes Key No. 2	
2		*Bolster Spring	4
	34013-462	**Bolster Spring Fastener Service Kit, One Side,** Includes Key Nos. 3-5	
3	25114-011	7/16"-20 UNF x 1¼" Bolt	32
4	48949-000	7/16"-20 UNF-2B Locknut	32
5	22962-027	7/16" Washer	64
6	58947-000	Auxiliary Load Spring	2
7	58960-001	Auxiliary Load Spring Shim	6
8	58196-004	½"-13 UNC x 2¼" Round Head Bolt	4
9	24531-016	½"-13 UNC x 3½" Bolt	4
10	22962-011	½" Washer	12
11	49846-000	½"-13 UNC-2A Locknut	8
12	57878-003	Rebound Strap	2
13	60639-000	Anchor Plate Assembly, Includes Key Nos. 14-15 *Replaces 59779-000*	4
14		*½" Washer	8
15		*½"-13 UNC-2A Locknut	8
16	58948-001	Auxiliary Load Spring Mounting Plate *Replaces 58948-000*	2
17	58949-000	¼" Auxiliary Load Spring Mounting Plate Shim	4
18	58524-000	⅞" Rebound Strap Mounting Plate	2
19	58343-001	Saddle Vee Bracket *Replaces 58343-000*	2
		Vee Bracket Fastener Service Kit,	
	58440-001	**One Side,** Includes Key Nos. 20-22	
	58440-002	**Axle Set,** Includes Key Nos. 20-22	
20	50764-006	¾"-10 UNC-2A x 2" Hex Head Bolt	8
21	22962-001	¾" Washer	16
22	49842-000	¾"-10 UNC-2B Locknut	8
23	60680-003L	Shock Absorber	4
24	22962-001	¾" Washer	4
25	30585-000	⅝" Upper Shock Locknut	4
26	22962-004	⅝" Upper Shock Washer	4
27		Equalizing Beam Assembly	2
a	58494-001	46K, 54" Non-Shim Type	
	58494-002	46K, 54" Shim Type	
	58494-005	40K • 46K, 60" Non-Shim Type	
	58494-006	40K • 46K, 60" Shim Type	
	58494-009	40K • 46K, 72½" Non-Shim Type	
	58494-010	40K • 46K, 72½" Shim Type	
b	59973-003	52K, 54" Shim Type	
c	57889-004	40K, 52" Non-Shim Type	
	57889-005	40K, 52" Shim Type	
	57889-001	40K • 46K, 54" Non-Shim Type	
	57889-002	40K • 46K, 54" Shim Type	
28		**Bar Pin End Bushing Service Kit, One Wheel End,**	
a	34013-087L	Non-Shim Type, 29a, 31	
b	34013-088L	Shim Type Includes Key No. 29b, 30-31	
c	34013-188L	Rotating, Shim Type, 29c, 30-31	
29		*Bar Pin End Bushing	4
a		Non-Shim Type	
b		Shim Type	
c		Rotating, Shim Type	
30		Bar Pin Shim	8
a	50130-000	3/16" • 3/16" Standard	
b	50131-000	¼" • ⅛" Optional	
c	57026-000	⅜" Optional flat shim	
31	34013-104	**Bar Pin End Bushing Fastener Kit, One Wheel End,** Includes Key Nos. 32-34	
32	48941-000	1"-8 UNC x 6" Hex Bolt	8
33	22962-008	1" Hardened Washer	16
34	48942-000	1"-8 UNC Locknut	8
35		**One-piece Longitudinal Torque Rod Assembly, Straddle/Straddle, Specify Length in mm ULTRA ROD®, Includes Key No. 37	
	62000-XXX	Front	1
	62001-XXX	Rear	1
	8240-00XX-XXX	****TRAAX ROD, *Replaces 72000-XXX and 72001-XXX*	2
36		***One-piece Transverse Torque Rod Assembly, Straddle/Taper, Specify Length in mm	2
	62350-XXX	ULTRA ROD, Includes Key Nos. 37-38	
	8244-0099-XXX	****TRAAX ROD, *Replaces 72350-XXX*	
	8233-0099-XXX	****TRAAX ROD, *Replaces 92350-XXX*	
37	47691-000L	Straddle Bushing	6
38	64697-000L	Taper Bushing	2
		Optional Two-Piece Torque Rod Assembly with Bushings Service Kit	
	60218-000	ULTRA ROD Straddle/Straddle	
	60215-000	ULTRA ROD Straddle/Taper	
	65781-000	ULTRA ROD PLUS Straddle/Taper	
	65781-001	XTRB Straddle/Straddle	
	65781-002	XTRB Straddle/Taper	
39	22186-000	Torque Rod Frame Bracket	2
40	45045-010	Backup Plate, *Replaces 45045-003*	2
41		*****Transverse Rod Axle Bracket	2
42	49689-000	Torque Rod Shim	As Req.
	70867-001	P-80 Lubricant - 10 ml (Not Shown)	Per Bushing 1

NOTES: Equalizing beam axle brackets for drive axles are supplied by the axle manufacturer.

* Item included in assembly/kit only, part not sold separately.

** Hendrickson's part number is stamped on the torque rod for identification. Be sure to include the suffix number when ordering, this number indicates torque rod length, The Hendrickson 2-piece torque rods can be used to create the desired length, see Torque Rod Selection Guide Literature No. 45745-148.

*** Transverse torque rods are mandatory for HN rear suspension regardless of axle spacing, refer to Hendrickson Literature No. 59310-004 and 59310-058.

**** Longitudinal and transverse TRAAX Rod bushings are non-serviceable, the entire torque rod assembly requires replacement. Visit TRAAX ROD website www.traaxrods.com for more information.

***** Not supplied by Hendrickson, used for reference only. Hendrickson is not responsible for components supplied by the vehicle manufacturer. For assistance with maintenance and rebuild instructions on these components see vehicle manufacturer.

Hendrickson **HAULMAAX / HN Bolster Gauge**, Literature No. 48422-546 can be obtained on-line at www.hendrickson-intl.com/litform.

HN 40K • 46K • 52K lb Capacity

Vehicles built between April 1996 and August 1998

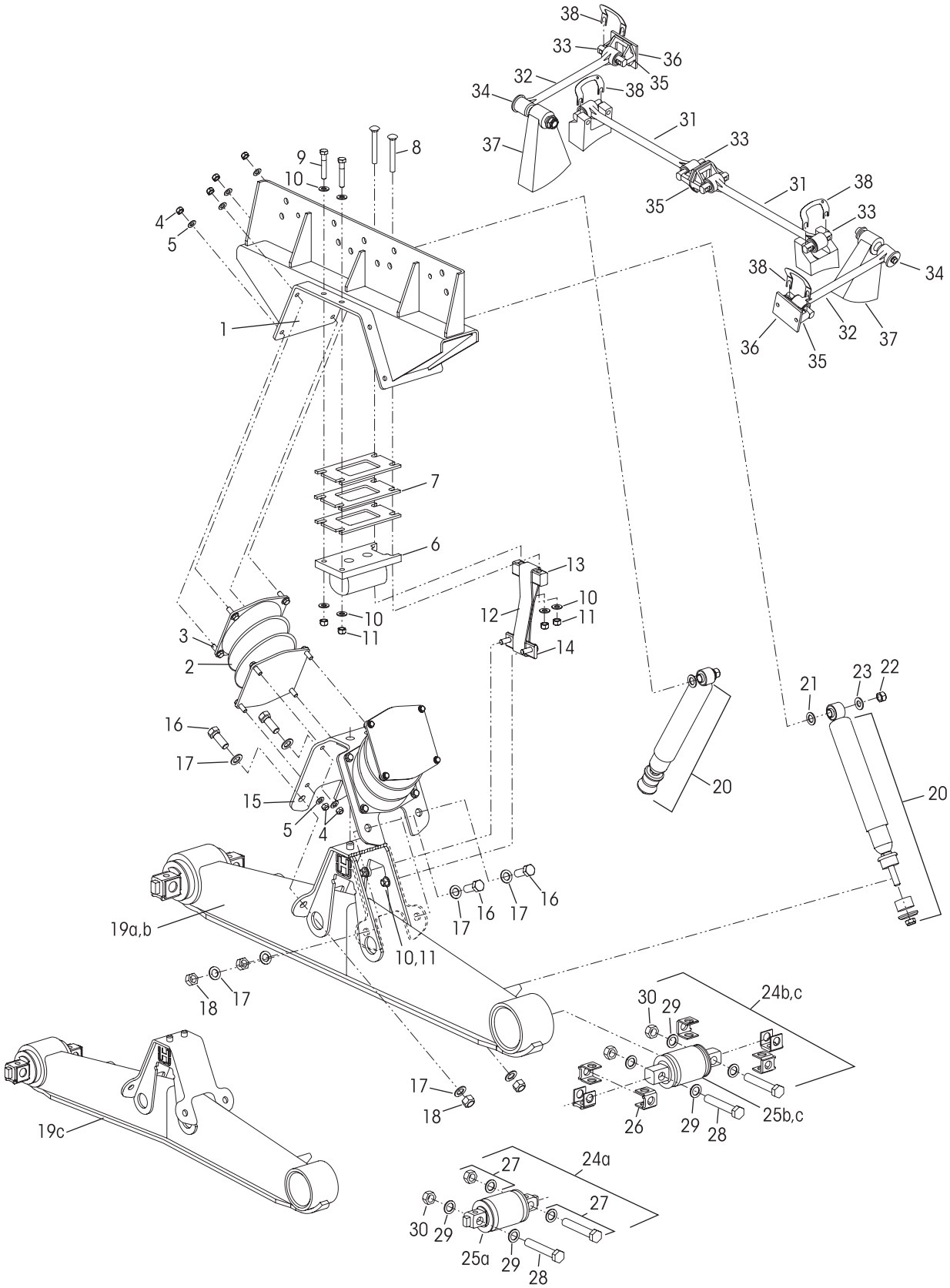

KEY NO.	PART NO.	DESCRIPTION	VEHICLE QTY.
1		Saddle Assembly, Includes Key Nos. 2-15 *See Figure 1 on Page 3*	2
	95409-XXX	16½", 17½" or 18½", *Replaces 60686-0XX*	
	95410-XXX	20¼" or 22½", *Replaces 58650-0XX*	
	60879-000L	**Bolster Spring Service Kit, One Set,** (2 pc) Includes Key No. 2	
2		*Bolster Spring	4
	34013-462	**Bolster Spring Fastener Service Kit, One Side,** Includes Key Nos. 3-5	
3	25114-011	7/16"-20 UNF x 1¼" Bolt	32
4	48949-000	7/16"-20 UNF-2B Locknut	32
5	22962-027	7/16" Washer	64
6		Auxiliary Load Spring *(58189-000 no longer available, see conversion kit 57974-011 below)*	2
7	57993-002	Auxiliary Load Spring Shim	6
8	58196-002	½"-13 UNC-2A x 3½" Round Head Bolt	4
9	24531-017	½"-13 UNC-2A x 2¼" Hex Head Bolt	4
10	22962-011	½" Washer	16
11	49846-000	½"-13 UNC-2A Locknut	12
12	57878-003	Rebound Strap	2
13	58524-000	Rebound Strap Mounting Plate	2
14	60639-000	Anchor Plate Assembly, Includes Fasteners *Replaces 59779-000*	2
15	58343-001	Saddle Vee Bracket	2
		Vee Bracket Fastener Service Kit,	
	58440-001	**One Side,** Includes Key Nos. 16-18	
	58440-002	**Axle Set,** Includes Key Nos. 16-18	
16	50764-006	¾"-10 UNC-2A x 2" Hex Head Bolt	8
17	22962-001	¾" Washer	16
18	49842-000	¾"-10 UNC-2B Locknut	8
19		Equalizing Beam Assembly	2
a	58494-001	46K, 54" Non-Shim Type	
	58494-002	46K, 54" Shim Type	
	58494-005	40K • 46K, 60" Non-Shim Type	
	58494-006	40K • 46K, 60" Shim Type	
	58494-009	40K • 46K, 72½" Non-Shim Type	
	58494-010	40K • 46K, 72½" Shim Type	
b	59973-003	52K, 54" Shim Type	
c	57889-004	40K, 52" Non-Shim Type	
	57889-005	40K, 52" Shim Type	
	57889-001	40K • 46K, 54" Non-Shim Type	
	57889-002	40K • 46K, 54" Shim Type	
20	60680-003L	Shock Absorber	4
21	22962-001	¾" Washer	4
22	30585-000	⅝" Locknut	4

KEY NO.	PART NO.	DESCRIPTION	VEHICLE QTY.
23	22962-004	⅝" Washer	4
24		**Bar Pin End Bushing Service Kit, One Wheel End,**	
a	34013-087L	Non-Shim Type, 25a, 27	
b	34013-088L	Shim Type, Includes Key No. 25b, 26a-27	
c	34013-188L	Rotating, Shim Type, 25c, 26a-27	
25		*Bar Pin End Bushing	4
a		Non-Shim Type	
b		Shim Type	
c		Rotating, Shim Type	
26		Bar Pin Shim	8
a	50130-000	3/16" • 3/16" Standard	
b	50131-000	¼" • ⅛" Optional	
c	57026-000	⅜" Optional flat shim	
27	34013-104	**Bar Pin End Bushing Fastener Kit, One Wheel End,** Includes Key Nos. 28-30	
28	48941-000	1"-8 UNC x 6" Hex Bolt	8
29	22962-008	1" Hardened Washer	16
30	48942-000	1"-8 UNC Locknut	8
31		**One-piece Longitudinal Torque Rod Assembly, Straddle/Straddle, Specify Length in mm ULTRA ROD®, Includes Key No. 33	
	62000-XXX	Front	1
	62001-XXX	Rear	1
	8240-00XX-XXX	****TRAAX ROD, *Replaces 72000-XXX and 72001-XXX*	2
32		***One-piece Transverse Torque Rod Assembly, Straddle/Taper, Specify Length in mm	2
	62350-XXX	ULTRA ROD, Includes Key Nos. 33-34	
	8244-0099-XXX	****TRAAX ROD, *Replaces 72350-XXX*	
	8233-0099-XXX	****TRAAX ROD, *Replaces 92350-XXX*	
33	47691-000L	Straddle Bushing	6
34	64697-000L	Taper Bushing	2
		Optional Two-Piece Torque Rod Assembly with Bushings Service Kit	
	60218-000	ULTRA ROD Straddle/Straddle	
	60215-000	ULTRA ROD Straddle/Taper	
	65781-000	ULTRA ROD PLUS Straddle/Taper	
	65781-001	XTRB Straddle/Straddle	
	65781-002	XTRB Straddle/Taper	
35	22186-000	Torque Rod Frame Bracket	2
36	45045-010	Backup Plate, *Replaces 45045-003*	2
37		****Transverse Rod Axle Bracket	2
38	49689-000	Torque Rod Shim	As Req.
	70867-001	P-80 Lubricant - 10 ml (Not Shown)	Per Bushing 1

KEY NO. 6 — AUXILIARY SPRING CONVERSION KIT NO. 57974-011

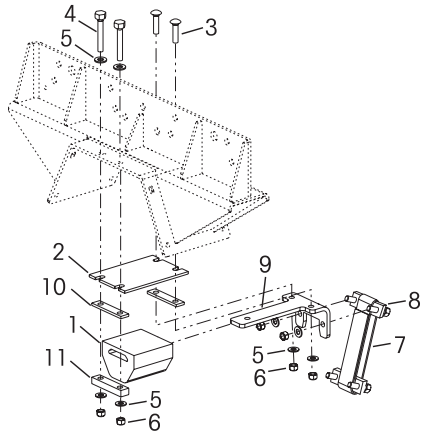

AXLE SET – INCLUDES KEY NOS. 1-11			QTY.
1	60314-000	Auxiliary Spring	2
2	58960-003	¾"-Auxiliary Spring Shim	2
3	58196-006	½"-13 UNC x 2¾" Round Head Bolt	4
4	24531-016	½"-13 UNC x 3½" Bolt	4
5	22962-011	½" Hardened Washer	14
6	49846-000	½"-13 UNC Locknut	14
7	57878-003	Rebound Strap	2
8	64700-000	Anchor Plate Assembly	4
9	58948-001	Auxiliary Spring Mounting Plate	2
10	58949-000	¼" Auxiliary Spring Mounting Plate Shim	4
11	58524-000	⅞" Rebound Strap Mounting Plate	4

■ Special Tools

BAR PIN END BUSHING TOOLS

Tiger Tool Part No. 15044
Visit tigertool.com

INSTALLATION TOOLS

OTC Part No. 1757
Visit otctools.com

REMOVAL TOOLS

OTC Part No. 206457
Visit otctools.com

OTC Part No. 302030
Visit otctools.com

ULTRA ROD TORQUE ROD BUSHING TOOLS

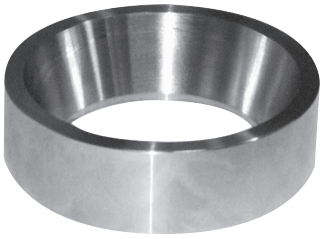

Hendrickson

Part No. 66086-001L

This is a general parts list to provide directional information. Components may vary by model. Questions in regards to parts, contact Hendrickson Truck Parts at 855.743.3733 (Toll-free U.S. and Canada), 630.910.2800 (Outside U.S. and Canada) or e-mail: truckparts@hendrickson-intl.com.

Actual product performance may vary depending upon vehicle configuration, operation, service and other factors.
All applications must comply with applicable Hendrickson specifications and must be approved by the respective vehicle manufacturer with the vehicle in its original, as-built configuration.
Contact Hendrickson for additional details regarding specifications, applications, capacities, and operation, service and maintenance instructions.

*Call Hendrickson at **630.910.2800** or **855.RIDERED (855.743.3733)** for additional information.*

HENDRICKSON

www.hendrickson-intl.com

TRUCK COMMERCIAL VEHICLE SYSTEMS
800 South Frontage Road
Woodridge, IL 60517-4904 USA
855.743.3733 (Toll-free U.S. and Canada)
630.910.2800 (Outside U.S. and Canada)
Fax 630.910.2899

SP-212 Rev H 09-26

© 1997 – 2026 Hendrickson USA, L.L.C. All Rights Reserved. All trademarks shown are owned by Hendrickson USA, L.L.C., or one of the affiliates, in one or more countries.

Information contained in this literature was accurate at the time of publication. Product changes may have been made after the copyright date that are not reflected.

Printed in United States of America