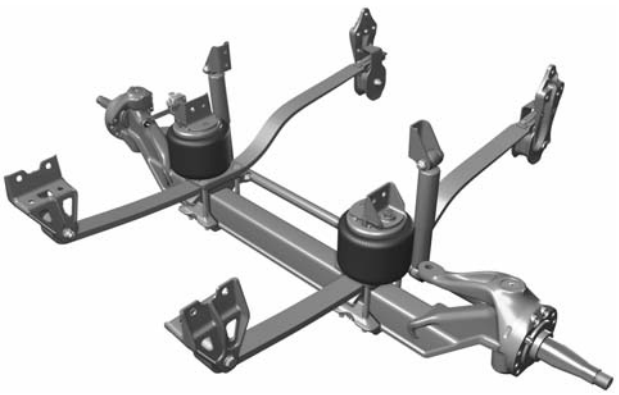

ASSEMBLY INSTRUCTIONS

AIRTEK® for Freightliner and Sterling Vehicles Single to Dual Height Control Valve Conversion

SUBJECT: Service Kit Nos. 58525-029, -031, -033, -034, -036, -037

LIT NO: 59310-034

DATE: July 2009 **REVISION:** C

INTRODUCTION

As of August 2007 all AIRTEK® equipped Freightliner and Sterling vehicles will have dual height control valves. Hendrickson has the following service kits available to convert from a single height control valve to dual height control valves.

HCV CONVERSION SERVICE KIT CONTENTS

DESCRIPTION	QTY.
LH HCV & Linkage Assembly (includes fasteners)	1
Upper Air Spring Brkt	1
Link Mount	1
*LH Front Axle Spacer	1
⅜"-16 UNC Bolt-3.5"	1
⅜" Hardened Washer	1

*May not be included in all kits

Kit No.	Vehicle	EPA	*Freightliner Left Hand Height Control Valve Support Bracket	Ride Height
58525-029	• Columbia • Century Class S/T • LC Sterling (Set Back)	98/04		280 mm / 315 mm
	• Coronado	98/04/07		
58525-031	• Columbia • Century Class S/T • LC Sterling (Set Back)	98/04		355 mm
	• Coronado	98/04/07		
58525-033	• Classic XL (Set Forward)	98/04/07	FL 16-18769	355 mm
58525-034	• Columbia • Century Class S/T • LC Sterling (Set Back) • Cascadia	07	FL 16-18682	355 mm
58525-036	• Classic XL (Set Forward)	98/04/07	FL 16-18682	315 mm
58525-037	• Columbia • Century Class S/T • LC Sterling (Set Back) • Cascadia	07	FL 16-18682	315 mm

NOTE: * The left hand height control valve support bracket for these models is **NOT INCLUDED** in the kit contents yet are needed to complete the dual height control valve conversion. Contact Freightliner to order support bracket listed (Freightliner part number shown).

DUAL HEIGHT CONTROL VALVE CONVERSION INSTRUCTIONS

1. Place vehicle on level floor.
2. Chock the wheels.
3. Install frame stands to maintain ride height.

⚠ WARNING

IF THE AIR SPRING IS TO BE RE-INSTALLED; INSPECT LOCK-TABS FOR DAMAGE OR CRACKS PRIOR TO RE-INSTALLATION. CARE MUST BE TAKEN TO REMOVE DIRT AND DEBRIS FROM THE PUSH-TO-CONNECT FITTING. FAILURE TO DO SO COULD RESULT IN THE PUSH-TO-CONNECT-FITTING FAILING TO SEAL WITH THE AIR LINE.

WARNING

WHEN SERVICING THE VEHICLE OR ATTACHING AN AIR SPRING AND THE VEHICLE IS ON THE GROUND, PRIOR TO AIRING THE SUSPENSION SYSTEM MAKE CERTAIN THE AIR SPRING LOCATOR IS INDEXED INTO THE UPPER AIR SPRING BRACKET PROPERLY, AND THE AIR SPRING IS FULLY SEATED ON THE SPRING TOP PAD. FAILURE TO FOLLOW THESE INSTRUCTIONS COULD RESULT IN PREMATURE AIR SPRING FAILURE, CAUSE PERSONAL INJURY, OR PROPERTY DAMAGE.

WARNING

PRIOR TO AND DURING DEFLATION AND INFLATION OF THE AIR SUSPENSION SYSTEM, ENSURE THAT ALL PERSONNEL AND EQUIPMENT ARE CLEAR FROM UNDER THE VEHICLE AND AROUND THE SERVICE AREA, FAILURE TO DO SO CAN CAUSE SERIOUS PERSONAL INJURY, DEATH, OR PROPERTY DAMAGE.

DANGER

AIR SPRING ASSEMBLIES MUST BE DEFLATED PRIOR TO LOOSENING ANY CLAMP GROUP HARDWARE. UNRESTRICTED AIR SPRING ASSEMBLIES CAN VIOLENTLY SHIFT. DO NOT INFLATE AIR SPRING ASSEMBLIES WHEN THEY ARE UNRESTRICTED. AIR SPRING ASSEMBLIES MUST BE RESTRICTED BY SUSPENSION OR OTHER ADEQUATE STRUCTURE. DO NOT INFLATE BEYOND PRESSURES RECOMMENDED BY AIR SPRING MANUFACTURER, CONTACT HENDRICKSON TECHNICAL SERVICES FOR DETAILS. IMPROPER USE OR OVER INFLATION MAY CAUSE AIR SPRING ASSEMBLIES TO BURST, CAUSING PROPERTY DAMAGE AND/OR SEVERE PERSONAL INJURY.

4. Remove the air from the air system by disconnecting the height control valve linkage(s) at the rubber grommet(s) and allowing the lever(s) to drop. This will exhaust air from the system.
5. Remove the delivery line from the left air spring.
6. Remove the left air spring.
7. Loosen the right side clamp group.
8. Loosen and remove the left clamp group mounting fasteners and discard.
9. Install a jack underneath the left leaf spring in front of the axle.
10. Raise the jack and lift the left leaf spring off the axle seat. Position the jack far enough away from the axle to allow removal of the axle spacer, see Figure 1.

FIGURE 1

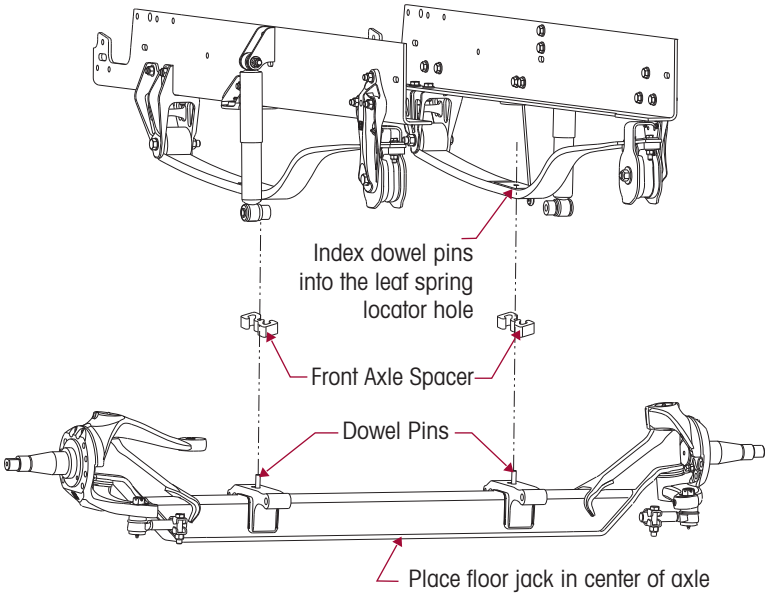

11. Remove the axle spacer from the left leaf spring and clamp group and replace with the new axle spacer provided in the kit which reduces the spacer by 10mm. If there is no spacer in the kit, do not use a spacer on the left hand side. It is not necessary to cut the dowel pin.

SERVICE HINT It may be necessary to remove the dowel pin to get the axle spacer out.

12. Reinstall the dowel pin in the axle wrap if removed.
13. Lower the leaf spring onto the axle wrap. Ensure the dowel pin engages the leaf spring and the top pad.
14. Install new ¾" clamp group fasteners.
15. Ensure that the clamp group is properly aligned and the hex bolts are seated in the top pad, and the bottom axle wrap is centered on the top axle wrap, see Figure 2.

FIGURE 2

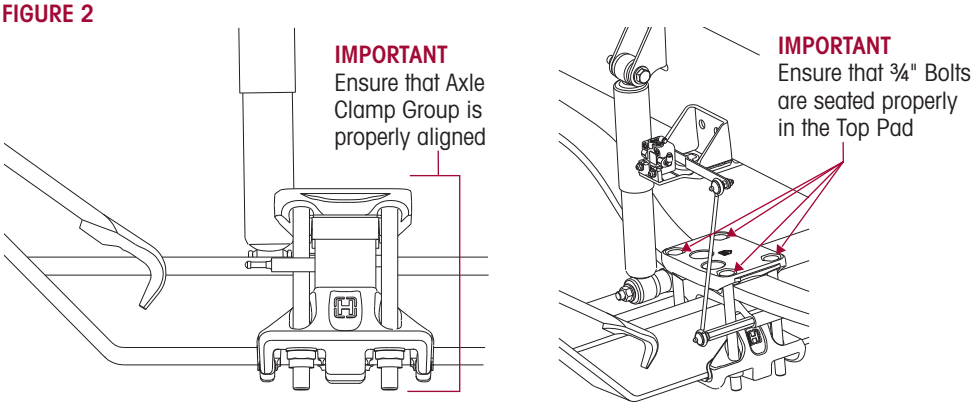

FIGURE 3

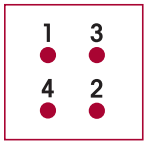

16. Tighten the clamp group locknuts evenly in 50 foot pounds increments to 285-305 foot pounds torque in the proper pattern to achieve uniform bolt tension, see Figure 3.
17. Remove the left upper air spring bracket and discard. Follow the vehicle manufacturer's procedure for Huck bolt removal.
18. Install the new left upper air spring bracket and height control valve mounting bracket, see Figure 4.

FIGURE 4

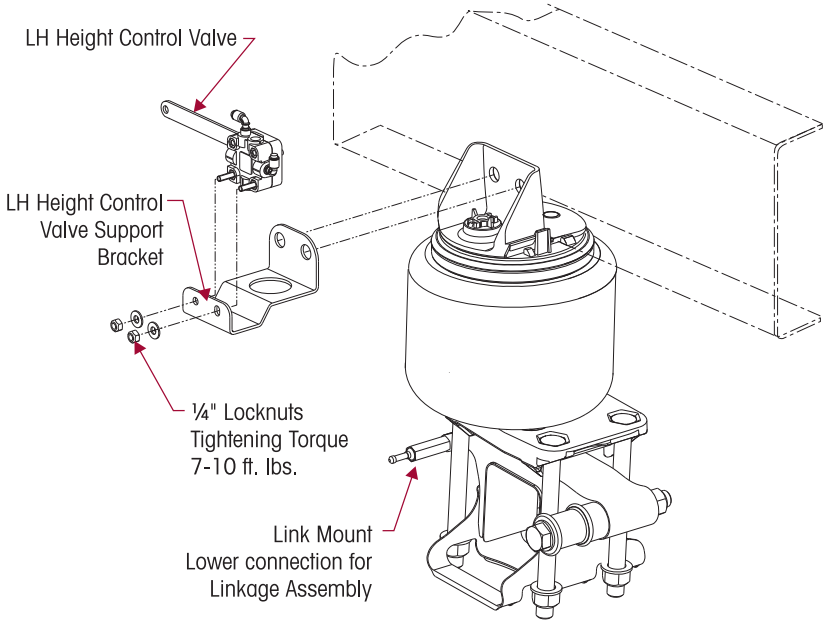

19. Tighten the upper left air spring fasteners to vehicle manufacturer's specifications.
20. Install the new left side height control valve assembly on the left side upper air spring mounting bracket. The height control valve mounts on the inboard side of the bracket.
21. Install the left air spring.
22. Install the new height control valve link mount on the left top wrap.
23. Install the left air spring delivery line into the new height control valve supply port.
24. Install a new ¼" air line from the left height control valve delivery port and into the left air spring fitting.
25. Cut the new line to length. Ensure that the ends of the line are cut square and air lines are fully seated in the fittings.

NOTE The supply line from the tank will continue to be the supply line for both height control valves.

26. It will be necessary to cut the supply line where it is routed (through the right frame rail hole or underneath the frame rail) and install a T-fitting at this location, see Figure 5.

FIGURE 5

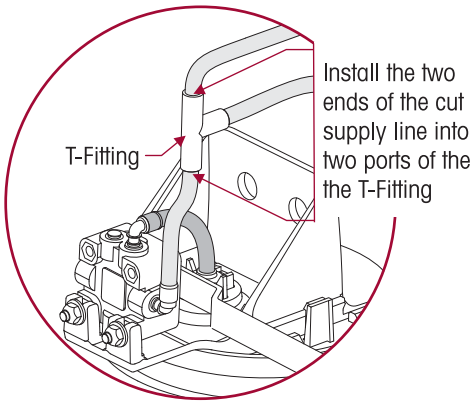

27. Install the two ends of the cut supply line into the two T-fitting ports.
28. Remove the former left air spring delivery line from the right height control valve, this will now be converted to the left height control valve supply line.
29. Install the air line into the remaining port on the T-fitting supply line inside the right frame rail. Trim line if necessary.
30. There are two options to plumb the right height control valve to the right air spring, see Figure 6.

FIGURE 6

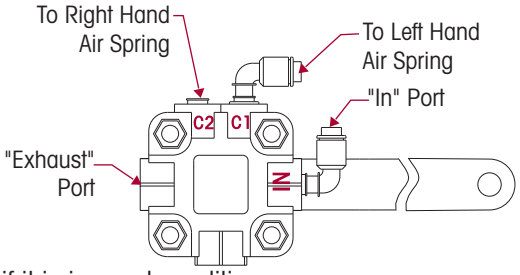

Option 1:

- Plug one delivery port on the right height control valve with a suitable fitting.
- Install an air line from the remaining delivery port to the right air spring.
- It is acceptable to reuse the old line if it is in good condition.

Option 2:

- Install two air lines into the delivery ports of the right height control valve.
- Cut one line and install a T-fitting.
- Insert the other delivery line into the T-fitting.
- Cut to length and install a line out of the T-fitting and into the air spring.

31. Secure all air lines inside the frame rail with plastic ties as necessary.
32. Air up the suspension.
33. Install the height control valve linkage(s) and inflate the suspension to normal operating pressure.
34. Remove the wheel chocks.
35. Verify proper ride height and adjust if necessary. See the following procedure.

AIRTEK DUAL RIDE HEIGHT INSPECTION PROCEDURE

The recommendation of the vehicle manufacturer is that dual height control valves are only to be installed on the front suspension when the rear suspension is equipped with a single height control valve system. This arrangement is best suited to keep the vehicle level versus having dual height control systems on both the front and rear suspensions.

1. Drive the vehicle onto a level surface.
2. Free and center all suspension joints by slowly moving vehicle back and forth several times without using the brakes. It is IMPORTANT when coming to a complete stop to verify the brakes are released.
3. Chock drive wheels.
4. Verify that the air system is at full operating pressure.
5. Detach the lower rubber grommet of the height control valve linkage from the lower stud and exhaust the suspension system air by lowering the height control valve linkage arms.
6. Re-attach the lower grommet of the height control valve linkages onto the lower studs to fill the suspension system with air. Wait until the airflow to the front air springs has stopped.
7. The ride is measured at the front of the air spring. Place the gauge, (Hendrickson AIRTEK ride height gauge, Literature Number 45745-159) so the flat surface of the gauge is against the side of the frame rail, the horizontal flat is sitting on top of the air spring bead plate. Align the bottom of the height gauge to the air spring piston flange as shown in Figure 7. Verify that the air spring height is within the "ACCEPTABLE" tolerance indicated on the gauge.

FIGURE 7

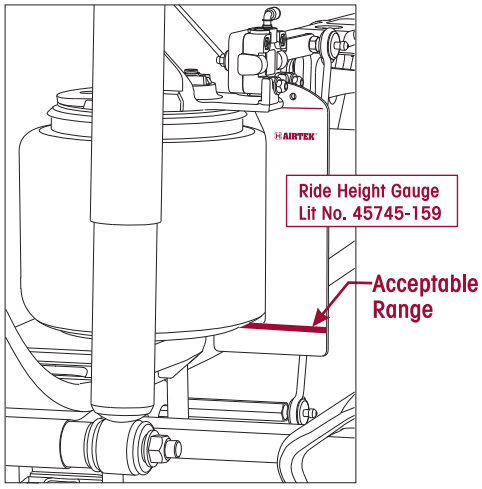

8. If the air spring is piston flange edge contact to the "BELOW SPEC" region, the ride is set too low. If the air spring piston flange contacts to the "ABOVE SPEC" region, the ride height is set too high. If the ride height is out of specification it will be necessary to adjust the ride height.
9. If a gauge is not available, measure the suspension reference ride height on the front axle (top front of the air spring to the bottom of the air spring flange height 7⅞" ± ⅛"). If reference ride height is out of specification, it will be necessary to adjust the ride height.

ADJUSTMENT PROCEDURE

1. Verify that the air system is at full operating pressure.

SERVICE HINT

It is very important that the leveling valve be cycled completely before and after any ride height adjustments. Cycling of the leveling valve will help make the adjustment more accurate.

2. See Air Spring Safety Notice on the front page prior to deflating or inflating the suspension system. Cycle the air system. Detach the lower rubber grommet(s) of the height control valve linkage(s) from the lower stud and exhaust the suspension system air by lowering the height control valve linkage arm.

3. Refill the suspension by raising the height control valve arm(s) by hand, so that the air springs are above the proper ride height.
4. Lower the leveling valve arm(s) to exhaust the air system until the suspension is at the proper ride height.
5. Use a ⅛" wooden dowel rod (golf tee) to set the neutral position for the height control valve(s) by aligning the hole in the leveling arm(s) with the hole in the height control valve cover, as shown in Figure 8. **DO NOT** use a metal rod or nail as this may cause damage to the height control valve.

FIGURE 8
To set neutral position align hole with hole in height control valve cover

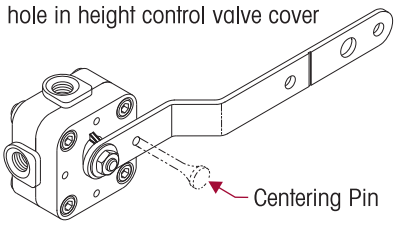

NOTE Hendrickson recommends the following be performed during any type of ride height adjustment to help prevent socket head cap screws from loosening from the height control valve housing, potentially causing subsequent air leaks from the height control valve.

6. Prior to adjusting the height control valves, clean the threads of the mounting fasteners of any debris and corrosion.
7. To adjust the height control valve, loosen the mounting locknuts.

FIGURE 9

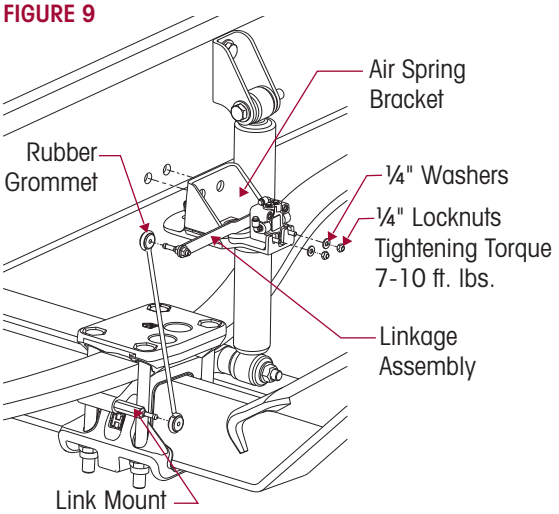

8. Adjust the height control valves by loosening the mounting locknuts and pivoting the valve body about the mounting bolt so the link mount stud inserts directly into the center hole of the rubber grommet at the proper height. Check the rubber grommet for any tearing or damage, replace as necessary.
9. Facing the air spring from the outboard side for the left side of the vehicle, pivot the valve body counter clockwise to increase the ride height and clockwise to decrease the ride height. For the right side of the vehicle, pivot the valve body clockwise to increase the ride height and counter clockwise to decrease the ride height.
10. Tighten the mounting locknuts to 7-10 foot pounds torque after the adjustment is made, see Figure 9. Install a (5 mm) allen wrench in the bottom socket head cap screws to prevent the screws from turning while re-tightening the locknuts. Remove the dowel from the height control valves.
11. Cycle the air from the system by lowering the height control valve arm.
12. Reconnect the height control valve linkage rubber grommet to the link mounts. Allow the air suspension system to completely fill with air.
13. Recheck the ride height after adjustment, (if equipped with dual height control valves check both sides of the vehicle).
14. Repeat steps 2 through 11 until the ride height is within specification.

When replacing or installing nylon air line tubing into the quick-connect fittings it is critical that the end of the air line is cut square. Improper cut of the end of the air line tubing can cause the air line to seat improperly in the quick connect fitting causing air leakage.

FIGURE 10

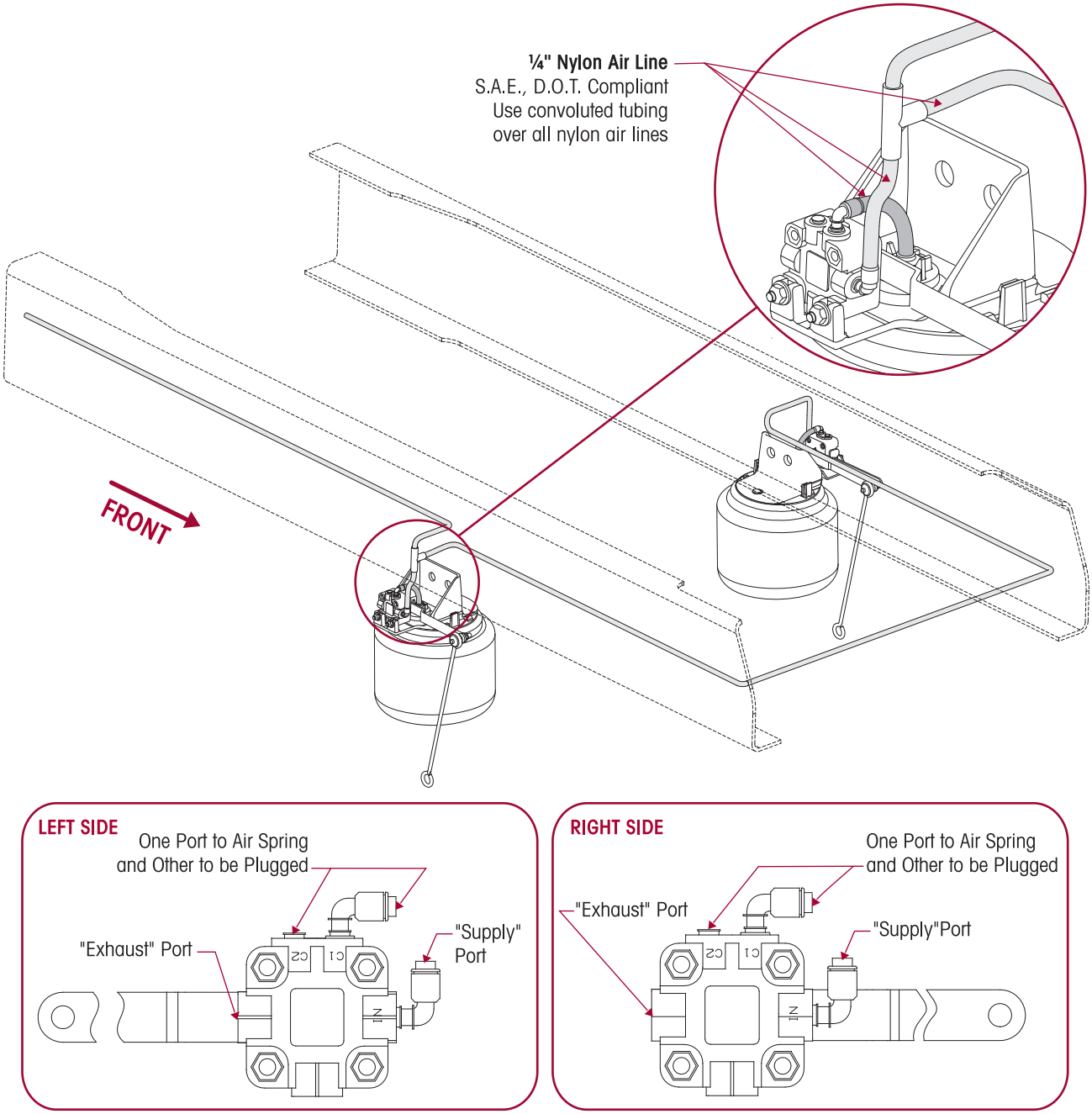

Refer any questions on this publication to Hendrickson Tech Services at 630.910.2800 or email: techservices@hendrickson-intl.com. Visit www.hendrickson-intl.com for more information on Hendrickson products.

www.hendrickson-intl.com

HENDRICKSON®

Truck Suspension Systems
800 South Frontage Road
Woodridge, IL 60517-4904 USA

630.910.2800
Fax 630.910.2899

Information contained in this literature was accurate at the time of publication. Product changes may have been made after the copyright date that are not reflected.
© 2009 Hendrickson USA, L.L.C. (U.S. Rights) Hendrickson International Corporation (Rights Outside U.S.) All Rights Reserved

59310-034 Rev C 07-09

Printed in United States of America